MODEL 690-48

Reduced Port Pressure Reducing Valve with Low Flow By-Pass

- **Modulating Control**
- **Maintains Constant Outlet Pressure Over a Wide Range of Flows**
- **Durable Construction**
- **Convenient and Space Saving**

The Cla-Val Model 690-48 Reduced Port Pressure Reducing Valve with Low Flow By-Pass automatically reduces a higher inlet pressure to a steady lower downstream pressure, regardless of changing flow rate. The low flow by-pass capability is achieved by using the Cla-Val Model CRD-L Direct Acting Pressure Reducing Valve as an integral part of the main valve. By doing this, space is saved and installation and maintenance become much easier.

The pressure reducing valve is hydraulically operated and controlled by a Cla-Val CRD pilot control, which senses pressure at the main valve outlet. An increase in outlet pressure forces the CRD pilot control to close and a decrease in outlet pressure opens the control. This causes the main valve cover pressure to vary, modulating the main valve, thereby, maintaining constant outlet pressure.

The Model CRD-L low flow pressure reducing by-pass is set to a higher pressure than the CRD pilot control. The CRD-L responds to pressure changes at the main valve outlet. When the CRD closes, the Model CRD-L remains open, allowing low flow to by-pass the main valve. The CRD-L closes when the flow decreases and the downstream pressure reaches its set-point .

The bypass size on this valve is limited by the body tapping size on the main valve. Consequently, in applications where higher flows for the low flow bypass may be required, such as building applications for off peak flows, a larger, separate bypass may be required. Refer to Cla-Val Model 90-99 as an option.

Schematic Diagram

Item	Description
1	100-20 Hytrol Main Valve
2	X47A Ejector
3	CRD Pressure Reducing Control
4	CRD-L Pressure Reducing Valve
5	CK2 Isolation Valve

Optional Features

Item	Description
A	X46A Flow Clean Strainer
B	CK2 Isolation Valve
C	CV Flow Control (Closing)*
D	Check Valves with Isolation Valve
P	X141 Pressure Gauge
S	CV Speed Control (Opening)*
V	X101 Valve Position Indicator
Y	X43 "Y" Strainer

*The optional closing speed control on this valve should always be open at least three (3) turns off its seat.

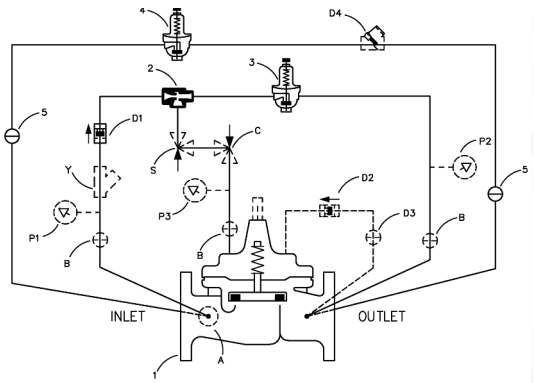

Typical Applications

This valve has the flexibility to be installed in a distribution system where the demand varies over a wide range. This frequently occurs in industrial, residential, educational, high-rise buildings and other applications.

Another important feature of the valve is its space efficient configuration, allowing easy installation and maintenance. A downstream pressure relief valve is also recommended for this type of application.

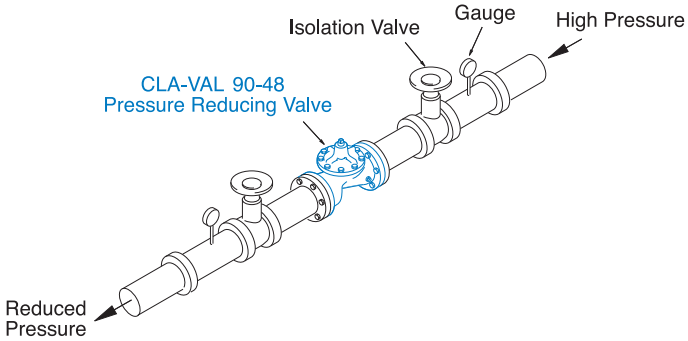

Model 690-48 (Uses 100-20 Hytrol Main Valve)

Pressure Ratings (Recommended Maximum Pressure - psi)

Valve Body & Cover		Pressure Class				
		Flanged			Grooved	Threaded
Grade	Material	ANSI Standards*	150 Class	300 Class	300 Class	End‡ Details
ASTM A536	Ductile Iron	B16.42	250	400	400	400
ASTM A216-WCB	Cast Steel	B16.5	285	400	400	400
UNS 87850	Low Lead Bronze	B16.24	225	400	400	400

Note: * ANSI standards are for flange dimensions only.
Flanged valves are available faced but not drilled.
‡ End Details machined to ANSI B2.1 specifications.
Valves for higher pressure are available; consult factory for details

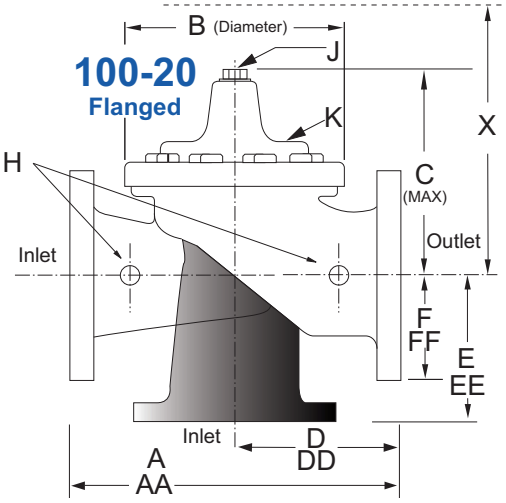

Materials

Component	Standard Material Combinations		
Body & Cover	Ductile Iron	Cast Steel	Low Lead Bronze
Available Sizes	3" -10" 80 - 250 mm	3" -10" 80 - 250 mm	3" -10" 80 - 250 mm
Disc Retainer & Diaphragm Washer	Cast Iron	Cast Steel	Bronze
Trim: Disc Guide, Seat & Cover Bearing	Bronze is Standard Stainless Steel is Optional		
Disc	Buna-N® Rubber		
Diaphragm	Nylon Reinforced Buna-N® Rubber		
Stem, Nut & Spring	Stainless Steel		

For material options not listed, consult factory.
Cla-Val manufactures valves in more than 50 different alloys.

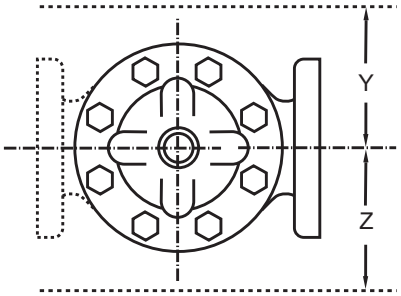

Model 690-48 Dimensions (In Inches) - For larger sizes, consult Factory

Valve Size (Inches)	3	4	6	8	10
A 150 ANSI	10.25	13.88	17.75	21.38	26.00
AA 300 ANSI	11.00	14.50	18.62	22.38	27.38
B Diameter	6.62	9.12	11.50	15.75	20.00
C Maximum	7.00	8.62	11.62	15.00	17.88
D 150 ANSI	—	6.94	8.88	10.69	CF*
DD 300 ANSI	—	7.25	9.38	11.19	CF*
E 150 ANSI	—	5.50	6.75	7.25	CF*
EE 300 ANSI	—	5.81	7.25	7.75	CF*
F 150 ANSI	3.75	4.50	5.50	6.75	8.00
FF 300 ANSI	4.12	5.00	6.25	7.50	8.75
H NPT Body Tapping	0.375	0.50	0.75	0.75	1.00
J NPT Cover Center Plug	0.50	0.50	0.75	0.75	1.00
K NPT Cover Tapping	0.375	0.50	0.75	0.75	1.00
Stem Travel	0.60	0.80	1.10	1.70	2.30
Approx. Ship Weight (lbs)	45	85	195	330	625
Approx. **X** Pilot System	13	15	27	30	33
Approx. **Y** Pilot System	10	11	18	20	22
Approx. **Z** Pilot System	10	11	18	20	22

See Cla-Val Model # 90-48 for applications requiring a full port valve.

Model 690-48 **Metric Dimensions** (Uses 100-20 Hytrol Main Valve)

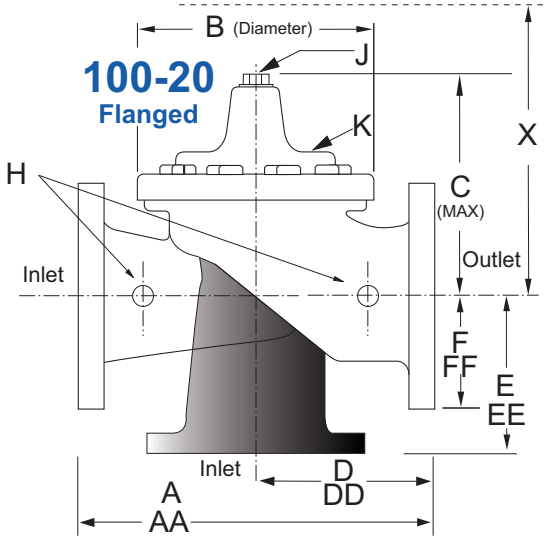

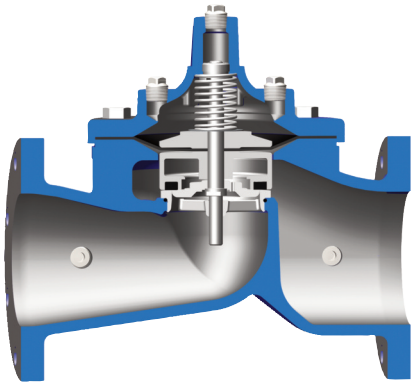

Model 100-20 Reduced Port Hytrol Main Valve

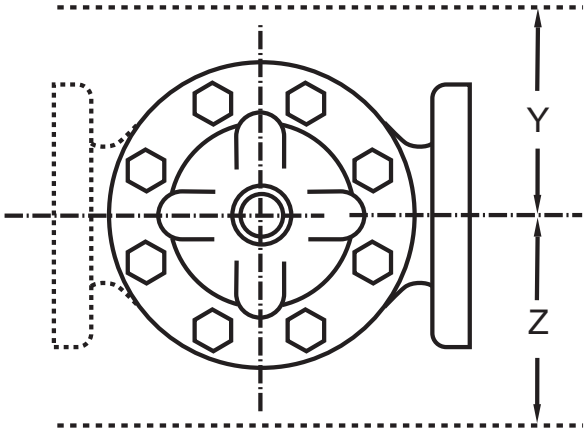

Model 690-48 **Metric Dimensions** (in mm) - For larger sizes, consult Factory

Valve Size (mm)	**80**	**100**	**150**	**200**	**250**
A 150 ANSI	260	353	451	543	660
AA 300 ANSI	279	368	473	568	695
B Diameter	168	232	292	400	508
C Maximum	178	219	295	381	454
D 150 ANSI	—	176	226	272	CF*
DD 300 ANSI	—	184	238	284	CF*
E 150 ANSI	—	140	171	184	CF*
EE 300 ANSI	—	148	184	197	CF*
F 150 ANSI	95	114	140	171	203
FF 300 ANSI	105	127	159	191	222
H NPT Body Tapping	0.375	0.50	0.75	0.75	1.00
J NPT Cover Center Plug	0.50	0.50	0.75	0.75	1.00
K NPT Cover Tapping	0.375	0.50	0.75	0.75	1.00
Stem Travel	15	20	28	43	58
Approx. Ship Weight (kgs)	20	39	89	150	284
Approx. **X** Pilot System	331	381	686	762	839
Approx. **Y** Pilot System	254	280	458	508	559
Approx. **Z** Pilot System	254	280	458	508	559

Valve Selection Guide

690-48 Valve Selection	100-20 Pattern: Globe (G), Angle (A), End Connections: Flanged (F) Indicate Available Sizes					
	Inches	3	4	6	8	10
	mm	80	100	150	200	250
Main Valve 100-20	Pattern	G	G, A	G, A	G, A	G
	End Detail	F	F	F	F	F
Suggested Flow (gpm)	Maximum	260	580	1025	2300	4100
	Minimum	1	1	1	1	1
Suggested Flow (Liters/Sec)	Maximum	16	37	65	145	258
	Minimum	.06	.06	.06	.06	.06

100-20 Series is the reduced internal port size version of the 100-01 Series. **For Lower Flows Consult Factory**

100-20 Pattern: Globe (G), Angle (A), **End Connections:** Threaded (T), Grooved (GR), Flanged (F) Indicate Available Sizes
100-20 Series is the reduced internal port Hytrol. **For Lower Flows Consult Factory** *Globe Grooved Only

Pilot System Specifications

CRD-L

CRD

Adjustment Ranges

CRD

2 to 30 psi
15 to 75 psi
20 to 105 psi
30 to 300 psi*

CRD-L (Bypass)

15 to 65 psi
25 to 100 psi
80 to 150 psi

*Supplied unless otherwise specified Other ranges available, please consult factory.

Temperature Range

Water: to 180° F/ 82° C

Materials

Standard Pilot System Materials
Pilot Control: Low Lead Bronze
Trim: Stainless Steel Type 303
Rubber:Buna-N® Synthetic Rubber

Optional Pilot System Materials
Pilot Systems are available with optional Aluminum, Stainless Steel or Monel materials.

See Cla-Val Model # 690-48 for applications requiring a reduced port valve.

When Ordering, Specify:

1. Catalog No. 690-48
2. Valve Size
3. Pattern - Globe or Angle
4. Pressure Class
5. Threaded, Flanged or Grooved
6. Trim Material
7. Adjustment Range
8. Desired Options
9. When Vertically Installed

Valve Options

X141 Pressure Gauge

X101AR Valve Position Indicator with Air Release

X101 Valve Position Indicator

X144 e-FlowMeter

X43H Strainer

Stainless Steel Pilot

©Copyright Cla-Val 2019 • Printed in USA • Specifications subject to change without notice.