CLA-VAL™

— MODEL — **698-06**

Hydraulic Pressure Management/ Water Savings Valve with Dual Setpoints

- **Simple means to achieve measurable water savings**
- **Helps reduce consumption**
- **100% hydraulic control**
- **Two adjustable downstream set points for high and low pressure**
- **Smooth transition between set point pressures**
- **Simple set-up**
- **Retrofits to existing valve without removal from pipeline**

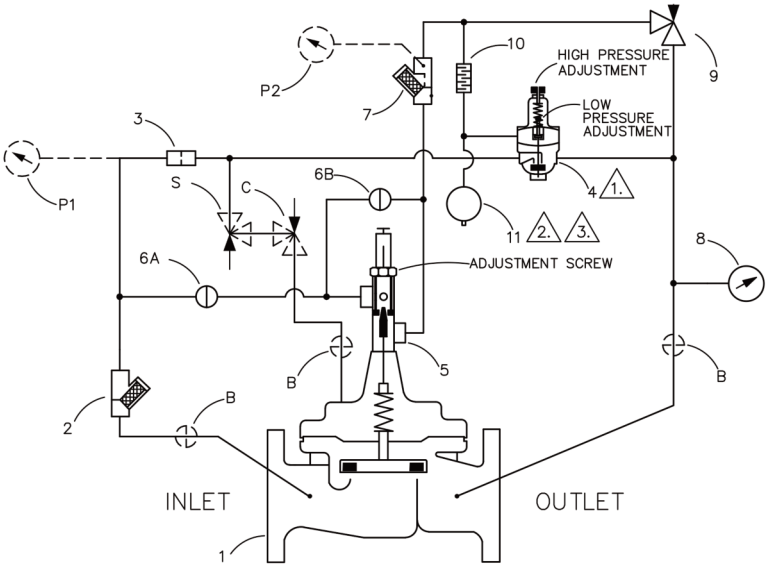

Schematic Diagram

Item	Description
1	100-20 Hytrol Main Valve
2	X43 "Y" Strainer
3	X58C Restriction Assembly
4	CPM-A Pressure Management Control
5	X78-4 Stem Assembly + X101 Valve Position Indicator Assembly
6	CK2 (Isolation Valve)
7	X44A Strainer Orifice Assembly
8	X141 Gage Assembly
9	CV Speed Control
10	X58E Restriction Assembly
11	Accumulator (Air Charged)

Optional Features

Item	Description
B	CK2 Isolation Valve
C	CV Flow Control (Closing)
P	X141 Gage Assembly
S	CV Flow Control (Opening)

Typical Performance

A dual system pressure with reduced system pressure during low demand periods is illustrated in the chart. At low flows, a minimum pressure is maintained and as flow increases to the switch point, delivery pressure increases to the maximum pressure set point for switch. The point between low pressure and high pressure setpoints is adjustable to fine-tune the valve to system requirements. The "water saving zone" below maximum pressure line represents valve effectiveness in reducing water losses and frequency of pipe breaks in a system.

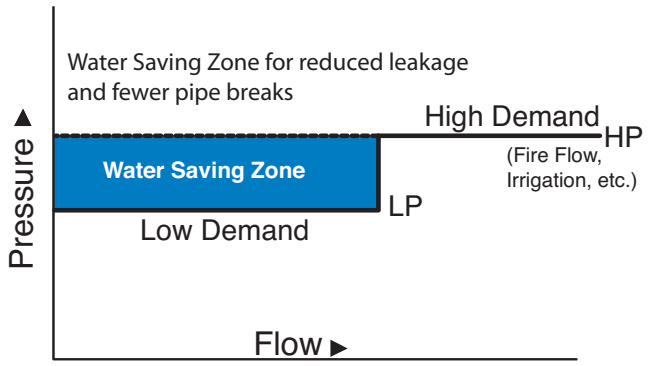

Model 698-06 (Uses 100-20 Hytrol Main Valve)

Pressure Ratings (Recommended Maximum Pressure - psi)

Valve Body & Cover		Pressure Class				
		Flanged			Grooved	Threaded
Grade	Material	ANSI Standards*	150 Class	300 Class	300 Class	End‡ Details
ASTM A536	Ductile Iron	B16.42	250	400	400	400
ASTM A216-WCB	Cast Steel	B16.5	285	400	400	400
UNS 87850	Bronze	B16.24	225	400	400	400

Note: * ANSI standards are for flange dimensions only.
Flanged valves are available faced but not drilled.
‡ End Details machined to ANSI B2.1 specifications.
Valves for higher pressure are available; consult factory for details

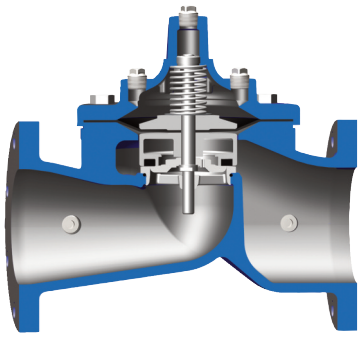

Model 100-20 Reduced Port Hytrol Main Valve

Materials

Component	Standard Material Combinations		
Body & Cover	Ductile Iron	Cast Steel	Bronze
Available Sizes	3" - 12" 80 - 300mm	3" - 12" 80 - 300mm	3" - 12" 80 - 300mm
Disc Retainer & Diaphragm Washer	Cast Iron	Cast Steel	Bronze
Trim: Disc Guide, Seat & Cover Bearing	Bronze is Standard Stainless Steel is Optional		
Disc	Buna-N® Rubber		
Diaphragm	Nylon Reinforced Buna-N® Rubber		
Stem, Nut & Spring	Stainless Steel		

For material options not listed, consult factory.
Cla-Val manufactures valves in more than 50 different alloys.

Model 698-06 Dimensions (In Inches)

Valve Size (Inches)	3	4	6	8	10	12
A 150 ANSI	10.25	13.88	17.75	21.38	26.00	30.00
AA 300 ANSI	11.00	14.50	18.62	22.38	27.38	31.50
B Diameter	6.62	9.12	11.50	15.75	20.00	23.62
C Maximum	7.00	8.62	11.62	15.00	17.88	21.00
D 150 ANSI	—	6.94	8.88	10.69	CF*	17.00
DD 300 ANSI	—	7.25	9.38	11.19	CF*	17.75
E 150 ANSI	—	5.50	6.75	7.25	CF*	13.75
EE 300 ANSI	—	5.81	7.25	7.75	CF*	14.75
F 150 ANSI	3.75	4.50	5.50	6.75	8.00	9.50
FF 300 ANSI	4.12	5.00	6.25	7.50	8.75	10.25
H NPT Body Tapping	0.375	0.50	0.75	0.75	1.00	1.00
J NPT Cover Center Plug	0.50	0.50	0.75	0.75	1.00	1.00
K NPT Cover Tapping	0.375	0.50	0.75	0.75	1.00	1.00
Stem Travel	0.60	0.80	1.10	1.70	2.30	2.80
Approx. Ship Weight (lbs)	45	85	195	330	625	900
Approx. **X** Pilot System	13	15	27	30	33	36
Approx. **Y** Pilot System	10	11	18	20	22	24
Approx. **Z** Pilot System	10	11	18	20	22	24

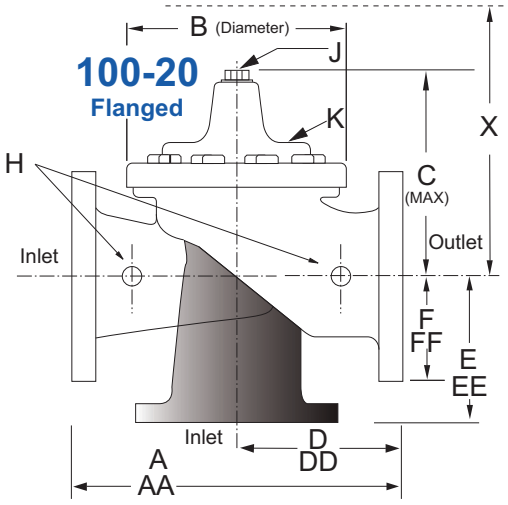

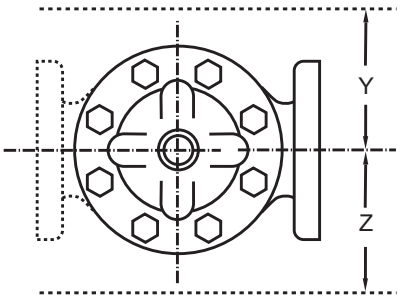

Model 698-06 Metric Dimensions (Uses 100-20 Hytrol Main Valve)

Dimensions (In mm)

Valve Size (mm)	80	100	150	200	250	300
A 150 ANSI	260	353	451	543	660	762
AA 300 ANSI	279	368	473	568	695	800
B Diameter	168	232	292	400	508	600
C Maximum	178	219	295	381	454	533
D 150 ANSI	—	176	226	272	CF*	432
DD 300 ANSI	—	184	238	284	CF*	451
E 150 ANSI	—	140	171	184	CF*	349
EE 300 ANSI	—	148	184	197	CF*	368
F 150 ANSI	95	114	140	171	203	241
FF 300 ANSI	105	127	159	191	222	260
H NPT Body Tapping	0.375	0.50	0.75	0.75	1.00	1.00
J NPT Cover Center Plug	0.50	0.50	0.75	0.75	1.00	1.00
K NPT Cover Tapping	0.375	0.50	0.75	0.75	1.00	1.00
Stem Travel	15	20	28	43	58	71
Approx. Ship Weight (kgs)	20	39	89	150	284	409
Approx. **X** Pilot System	331	381	686	762	839	915
Approx. **Y** Pilot System	254	280	458	508	559	610
Approx. **Z** Pilot System	254	280	458	508	559	610

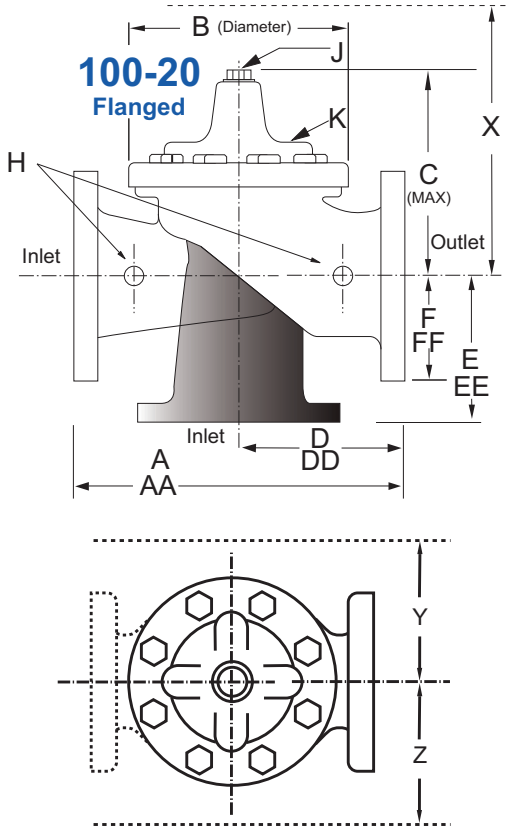

How It Works

The Cla-Val Model 698-06 Water Saving Valve is a pressure reducing valve that uses two downstream set points to achieve optimum system pressure; i.e. the capability delivering only the pressure that is needed to meet current demand.

A high pressure set point is selected for high flow demand and a low pressure set point is selected for low demand. This dual set point arrangement allows for reduction in water consumption as well as unintentional water loss by keeping system piping from being over-pressurized during periods of low demand. It does this without inhibiting adequate pressure during high or fire demand. The design is 100% hydraulic and, in addition, to the dual pressure set points, the transition point at which the pressure changes based on the flow is also adjustable. The patented design of the valve allows for smooth transition from one set point to the other, providing optimum performance and measurable water savings by reducing consumption, minimizing leaks and lessening the potential for pipe breaks.

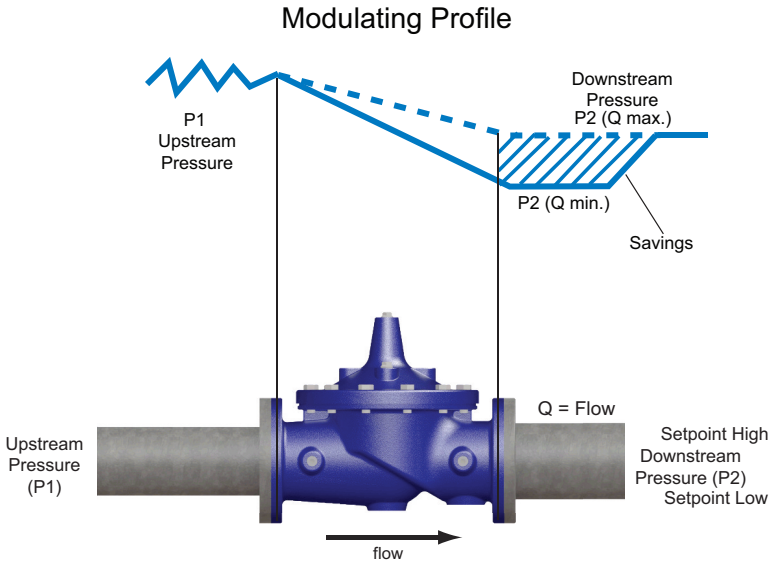

698-06 Valve Selection	100-20 Pattern: Globe (G), Angle (A), End Connections: Flanged (F) Indicate Available Sizes						
	Inches	3	4	6	8	10	12
	mm	80	100	150	200	250	300
Main Valve 100-20	Pattern	G	G, A	G, A	G, A	G	G
	End Detail	F	F	F	F	F	F
Suggested Flow (gpm)	Maximum	260	580	1025	2300	4100	6400
	Minimum	1	2	4	10	15	35
Suggested Flow (Liters/Sec)	Maximum	16	37	65	145	258	403
	Minimum	.06	.13	.25	.63	.95	2.2
	100-20 Series is the reduced internal port size version of the 100-01 Series.					**Lower Flows Consult Factory**	

Many factors should be considered in sizing pressure reducing valves including inlet pressure, outlet pressure and flow rates. For sizing questions or cavitation analysis, consult Cla-Val with system details.

Not Recommended for Dead-end Service

Pilot System Specifications

Temperature Range

Water: to 180°F

Materials

Standard Pilot System Materials
Pilot Control: Stainles Steel & Low Lead Bronze
Trim: Stainless Steel Type 303
Rubber: Buna-N® Synthetic Rubber

Go to www.cla-val.com for Purchase Specification

When Ordering, Specify:

1. Catalog No. 698-06
2. Valve Size
3. Pattern - Globe or Angle
4. Pressure Class
5. Threaded or Flanged
6. Trim Material
7. Desired Options
8. When Vertically Installed

CLA-VAL
1701 Placentia Avenue • Costa Mesa, CA 92627
800-942-6326 • Fax: 949-548-5441 • Web Site: cla-val.com • E-mail: info@cla-val.com

CLA-VAL CANADA
4687 Christie Drive
Beamsville, Ontario
Canada L0R 1B4
Phone: 905-563-4963
E-mail sales@cla-val.ca

CLA-VAL EUROPE
Chemin des Mésanges 1
CH-1032 Romanel/
Lausanne, Switzerland
Phone: 41-21-643-15-55
E-mail: cla-val@cla-val.ch

CLA-VAL UK
Dainton House, Goods Station Road
Tunbridge Wells
Kent TN1 2 DH England
Phone: 44-1892-514-400
E-mail: info@cla-val.co.uk

CLA-VAL FRANCE
Porte du Grand Lyon 1
ZAC du Champ du Périer
France - 01700 Neyron
Phone: 33-4-72-25-92-93
E-mail: cla-val@cla-val.fr

CLA-VAL PACIFIC
45 Kennaway Road
Woolston, Christchurch, 8023
New Zealand
Phone: 64-39644860
www.cla-valpacific.com
E-mail: info@cla-valpacific.com

©COPYRIGHT CLA-VAL 2019 Printed in USA Specifications subject to change without notice.

visit www.cla-val-latinamerica.com for Spanish literature

E-698-06 (R-02/2019)