CLA-VAL

39A

OWNERS MANUAL

CONTENTS

INTRODUCTION

Thank you for choosing the CLA-VAL 39A air valve for your application.

The 39A has come about after extensive research and experience into air valves and water pipelines. The 39A is perfectly suited for the bulk water market demands.

The 39A has several features which make it the best choice for your air valve application.
It is light and compact, easy to install, is simple to service and requires no initial spares. However should you need to clean the valve or investigate the cause of any leakage, all O-rings are standard metric sizes and are available from most reputable O-ring suppliers.

The valve has an integral anti slam feature specifically sized for bulk water pipelines. The 39A, if correctly sized and placed, will offer surge protection in the event of rapid filling of pipelines and surge events such as pump trip.

The 39A is also designed to offer full port vacuum break, in the event of your pipeline been drained or if your pipeline suffers a pipe burst, thus ensuring the safeguarding of your pipeline, pipe components, valves and seals.

The high volume air release function allows for uninterrupted filling at a safe filling rate. It will not interfere or slowdown the consultants / engineers proposed filling rates, as long as the filling rates are within safe parameters for the pipeline.

The small orifice functionality allows air to be removed from the system while the system is pressurised, preventing the formation of air locks in the system and keeping the system running efficiently.

This manual is intended to give all the information necessary to, size your valve correctly, place your valve correctly and maintain the valve when needed.

39A AIR VALVE PLACEMENT

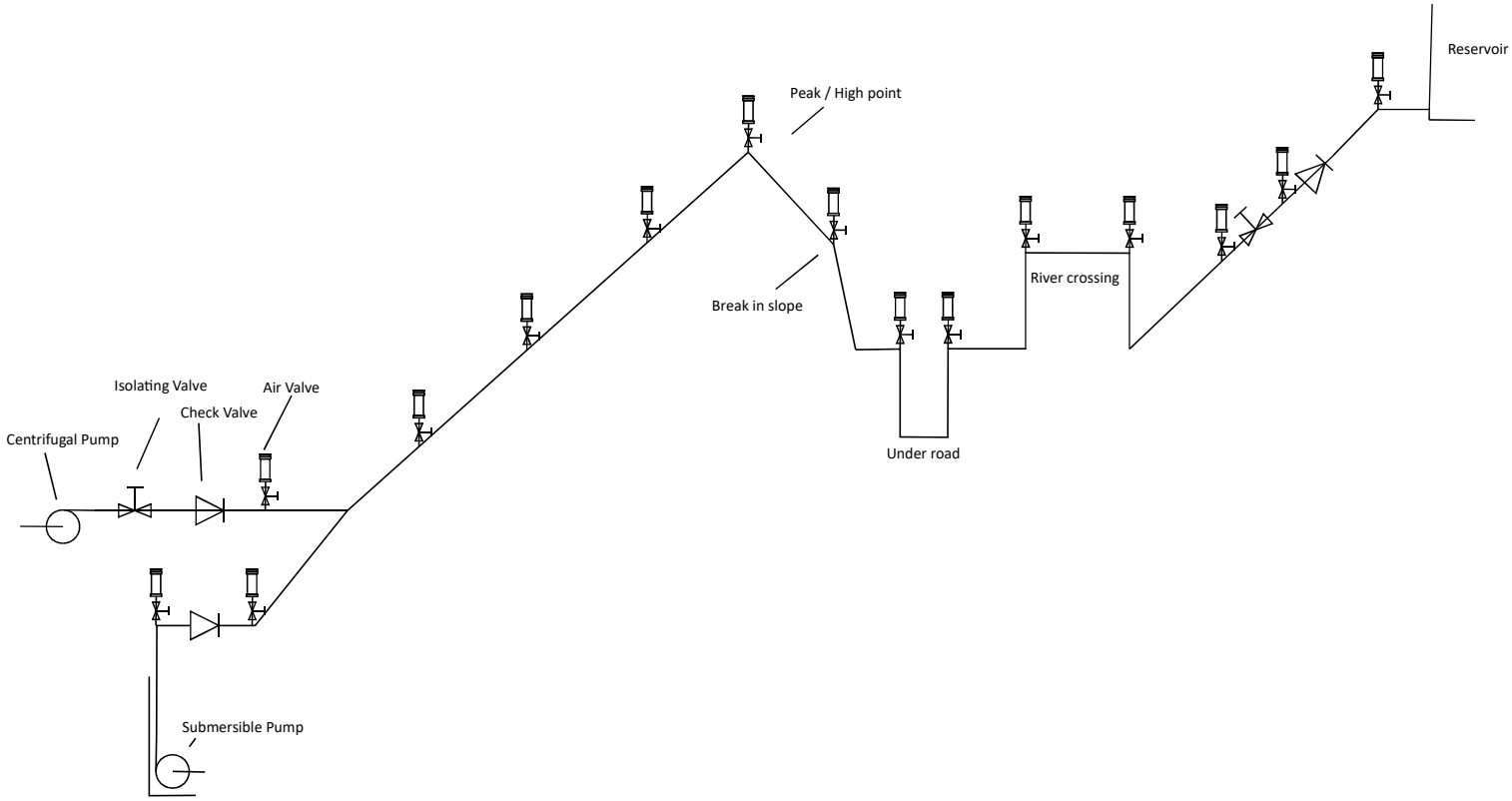

Peaks/high points
The most important areas to place air valves are high points or peaks along the pipeline. Air will always rise to these points when filling and when the pipeline is operating. Water will also always drain from the peaks first when draining or in the event of a burst.

Breaks in slope
A break in slope is defined as any point where, under gravity, water will drain away from a point faster than it reaches that point causing column separation. These points can also be a point of turbulence where air can be released from solution.

Long ascending and descending sections
Air valves on long ascending and descending sections should be placed every 1970 ft.

Other places where air valves should be considered
<u>In Pump Stations</u>
Centrifugal pumps after check valves, preferably six times the pipeline diameter away from the check valve. Turbine and submersible pumps, before and after the check valve. If only one is possible, then before the check valve in these instances. All air valves in pump stations should be of the 39Ab type of air valves.

<u>Isolation and Check Valves.</u>
Air valves should be placed with any isolation or inline check valve that will as a result of closure have water running away from the valve. The air valve should be placed on the side of the valve that water will drain from. In the case of isolation valves or check valves placed on peaks an air valve should be placed either side of the valve.

VALVE SIZING

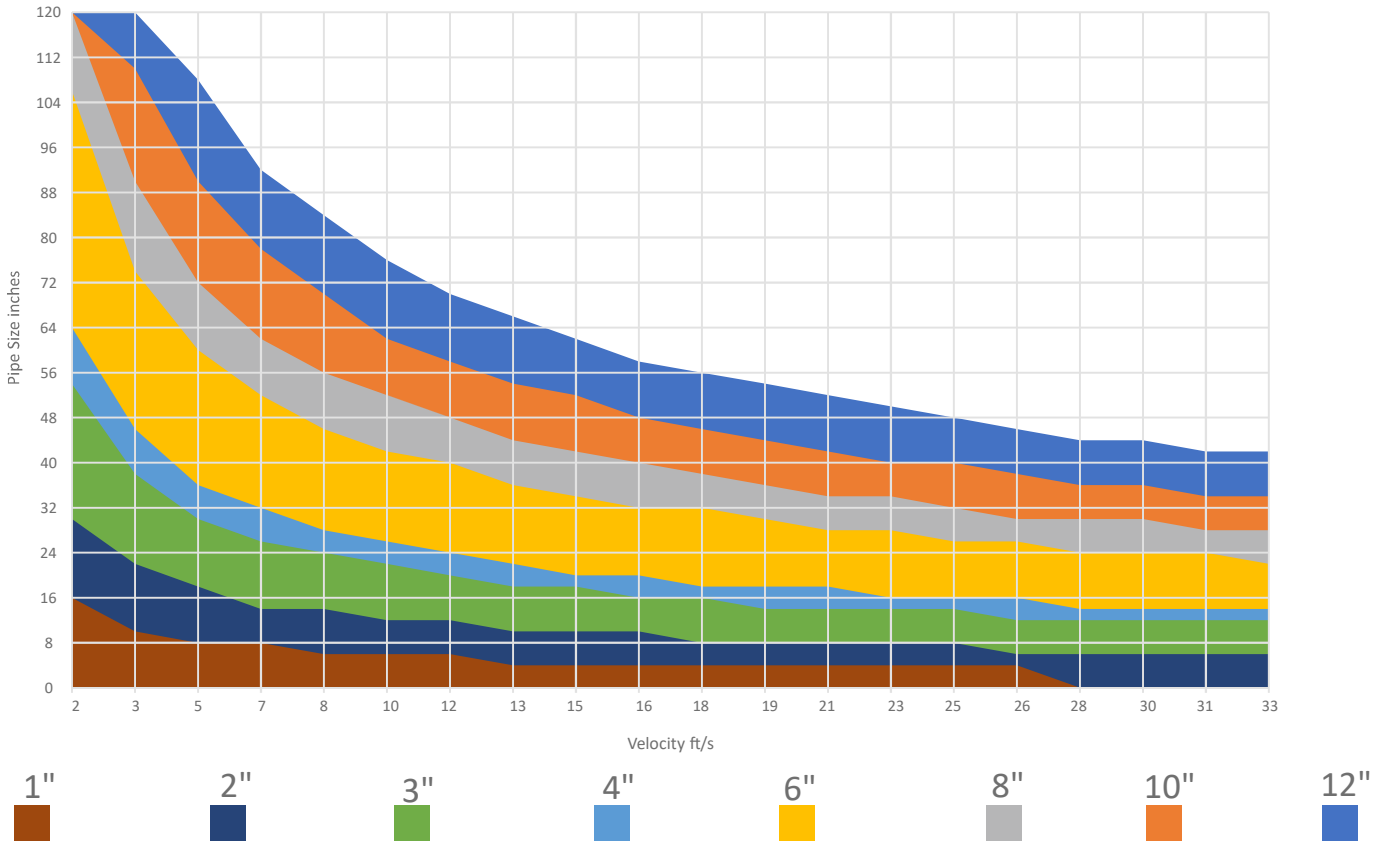

How To Use the Chart

Select pipe size and velocity, use either maximum flow velocity or calculate drainage velocity based on drainage or expected potential rupture. Where the pipe size and velocity intersect there will be a colour band, match the colour band to the valve size in the legend below. This will give you the valve size of a valve capable of drawing in sufficient air to match the drainage rate. All values are based on maintaining a minimum negative pressure of 5 psi in the pipeline pressure. It is not good practice to allow the negative pressure drop below 8.5 psi negative differential in the pipeline. Be aware when sizing that the upper part of the band is closer to the minimum negative differential of 5 psi and the lower part closer to 1.5 psi negative differential pressure. If you are quite close to the higher part of the band, one should then switch to the next size of valve to assure the safety of the pipeline.

	Convert flow in gpm per second into velocity in ft/s						
Pipeline Size in inches	120	105698	211397	352328	422794	528492	704656
	112	92075	184150	306917	368300	460375	613834
	104	79391	158783	264638	317565	396956	529275
	96	67647	135294	225490	270588	338235	450980
	88	56842	113685	189474	227369	284211	378948
	80	46977	93954	156590	187908	234885	313181
	72	38051	76103	126838	152206	190257	253676
	64	30065	60131	100218	120261	150327	200436
	56	23019	46038	76729	92075	115094	153458
	48	16912	33824	56373	67647	84559	112745
	40	11744	23489	39148	46977	58721	78295
	32	7516	15033	25054	30065	37582	50109
	24	4228	8456	14093	16912	21140	28186
	16	1879	3758	6264	7516	9395	12527
	8	470	940	1566	1879	2349	3132
	4	117	235	391	470	587	783
		3	6	10	12	15	20
	Pipeline velocity in ft/s						

This table is to help you calculate your velocity, based on flow and pipe size. Select your pipe size in the left hand blue column. Run your finger to the right until you find the flow rate closest to your pipelines maximum demand rate. Drop your finger to the bottom blue column and it will give you your flow velocity in feet per second(ft/s). Should your pipe size not be available you can calculate your velocity using this calculation:

$$V = \frac{Q * 0.321}{A}$$

Where
V= Velocity ft/s
Q=flow in gpm
A= Area inches²

SERIES 39A
General arrangement and dimensions

1" & 2" threaded
Flanged option also available

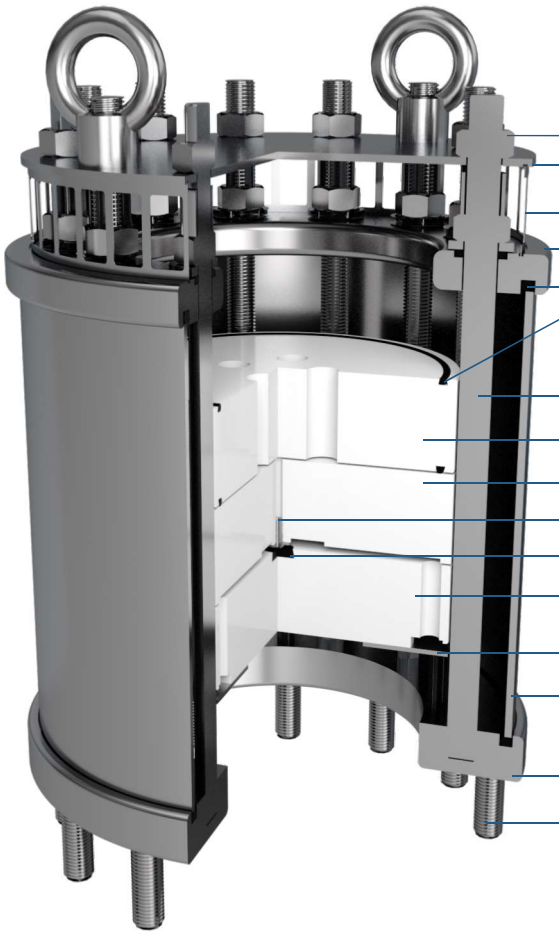

Operating Pressures
7.2 - 363 psi
7.2 - 580 psi
7.2 - 928 psi
7.2 - 1450 psi

Operating Temperatures
32 - 176°F

End Connection
Screwed NPT
Flanged studded

Double Acting with Anti Slam Orifice
(Triple acting / Three stage)

Size	Model no.	Pressure Rating	Overall Height	Overall Diameter	Weight
1"	SERIES 39A	363 psi	11.26"	3.94"	9 lbs
	SERIES 39A	580 psi	13.23"	3.94"	11 lbs
2"	SERIES 39A	363 psi	11.85"	5.12"	15 lbs
	SERIES 39A	580 psi	13.62"	5.12"	18 lbs
3"	SERIES 39A	232 psi	10.98"	7.87"	35 lbs
	SERIES 39A	363 psi	10.98"	7.87"	35 lbs
	SERIES 39A	580 psi	12.32"	7.87"	42 lbs
4"	SERIES 39A	232 psi	10.79"	8.66"	35 lbs
	SERIES 39A	363 psi	10.98"	9.25"	42 lbs
	SERIES 39A	580 psi	12.56"	9.25"	51 lbs
6"	SERIES 39A	232 psi	17.24"	11.22"	88 lbs
	SERIES 39A	363 psi	17.68"	11.81"	102 lbs
	SERIES 39A	580 psi	19.06"	11.81"	135 lbs
8"	SERIES 39A	232 psi	19.57"	13.39"	132 lbs
	SERIES 39A	363 psi	19.96"	14.17"	143 lbs
	SERIES 39A	580 psi	20.87"	14.76"	181 lbs
10"	SERIES 39A	232 psi	22.55"	17"	242 lbs
12"	SERIES 39A	232 psi	24.6"	21"	418 lbs

Larger sizes are available on request up to 18”

TROUBLE SHOOTING

In general, the 39A valve will leak as an indication of a problem. As such the first thing that needs to be done is define what we consider leaking: Air valves will always pass some water vapour when discharging pressurised air. This vapour may accumulate within the top of the air valve and offer the appearance of leaking. The second phenomena which is often mistaken for leaking is, as the valve builds to sealing pressure some water may bypass the top float. Some of this water becomes trapped between the sealed float and the top of the flange. As the valve breathes this air will push water out of the flange recess and appear to be leaking. This will stop after a while of the valve been pressurised.

What we define as a leak: A leak is either a constant dripping or rivulet of water that does not stop.

Problem	Cause	Comments	Solution
Valve leaking, sometimes gushing, sometimes dripping.	Low pressure or fluctuating pressure.	The valve is designed to seal at 7.3 PSI. If pressures are below this, the valve will leak.	Solution 1: If there is a better location with pressure, within the working range of the valve, transfer the valve. Solution 2: If the valve placement is essential for the application, then fit the valve with a discharge pipe, that can pipe away the leakage to a safe place. (Contact your agent or the manufacturer for options).
Valve leaking constantly.	Sand or silt in the valve.	If sand and silt get passed into the valve, the valve will leak.	Sometimes with sand and silt, the valve can be flushed without disassembly and this may fix the problem. This can be done by isolating the valve from pressure, removing the top cap, push down on the floats and letting the water pass through the valve. Repeat two or three times and pressurise valve. If leaking persists the valve may need to be opened and cleaned.

Problem	Cause	Comments	Solution
Valve leaking constantly.	Damage to O-ring or nozzle seat or nozzle.	On occasion, debris may pass into the valve and pass out freely. After a while, however, during the time the debris is trapped in the valve, an O-ring seal or other component may get damaged.	Follow maintenance instructions and replace damaged item.
Valve leaking constantly.	Debris trapped in valve.	On occasion when commissioning or replacing pipes. Some debris items may get caught in the line and washed into the valve.	Follow maintenance instructions and remove item.

SPARES KIT CONTENTS

Barrel O-rings x 2

Anti-slam O-rings x 2

Tie Rod O-Rings x 4 or 8 or 12 dependant on valve size

Nozzle

Nozzle seat

TORQUE FIGURES

DN 25	11 lbf.ft
DN 50	15 lbf.ft
DN 80 &100	30 lbf.ft
DN 150 & 200	52 lbf.ft

MAINTAINING THE VALVE

Warning
isolate the valve
before commencing
any work

1. Before doing any maintenance on the valve make sure the valve is isolated from pressure.

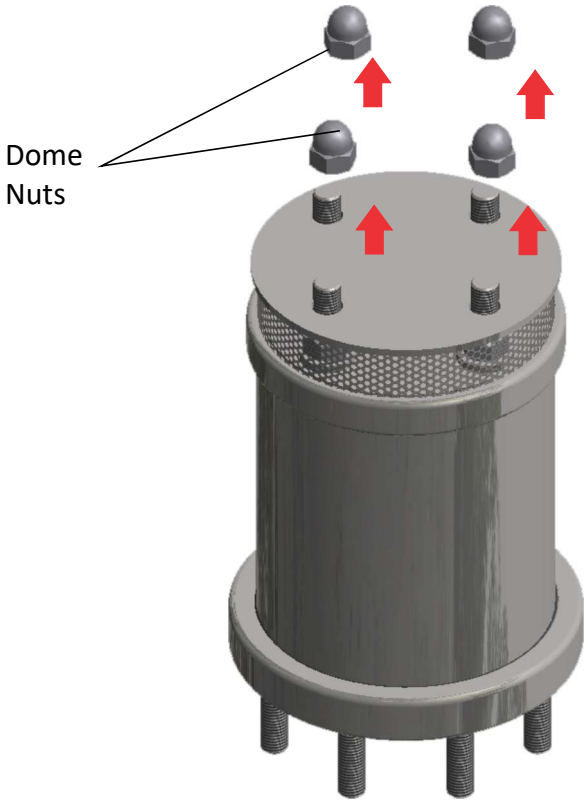

2. Remove the nuts from the valve.

3. Remove the top cap from the valve

4. Remove the screen mesh from valve.

Tip

If O-ring's offer a lot of resistance when removing lubricate with water

5. Remove nyloc nuts, washers and O-rings from tie rods.

6. Remove the top flange, be aware that some pressure may still be trapped in the valve. Open cautiously, initially pulling the flange up and away from you.

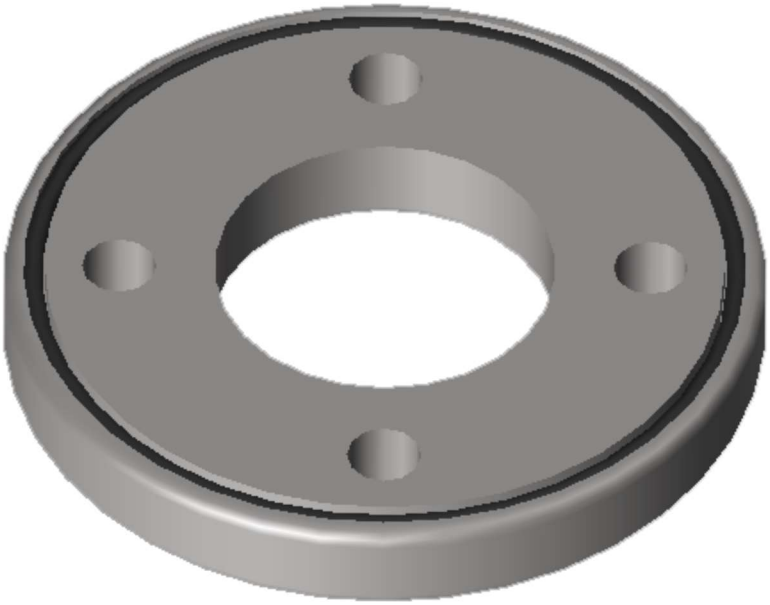

7. Check top flange O-ring. If damaged, replace with new O-ring.

8. Check valve internals for obvious debris and clear.

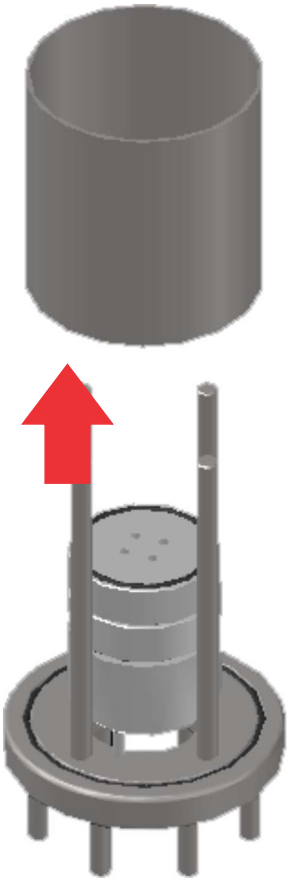

9. Remove barrel, be aware when removing the barrel that water may still be inside and will spill as you lift the barrel.

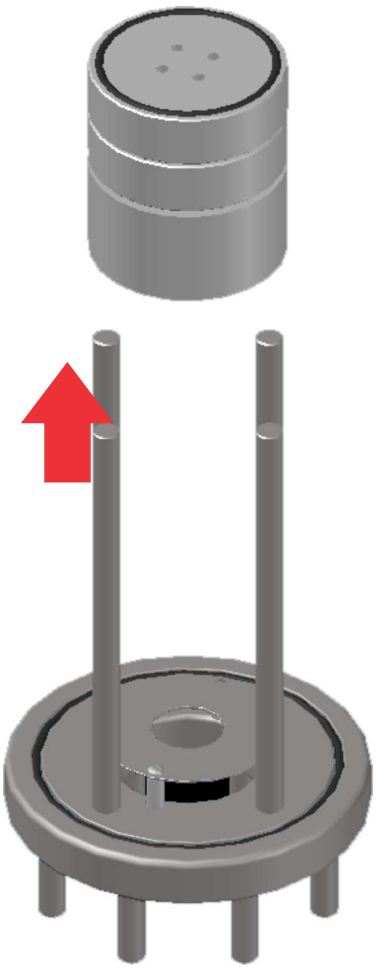

10. Remove float set.

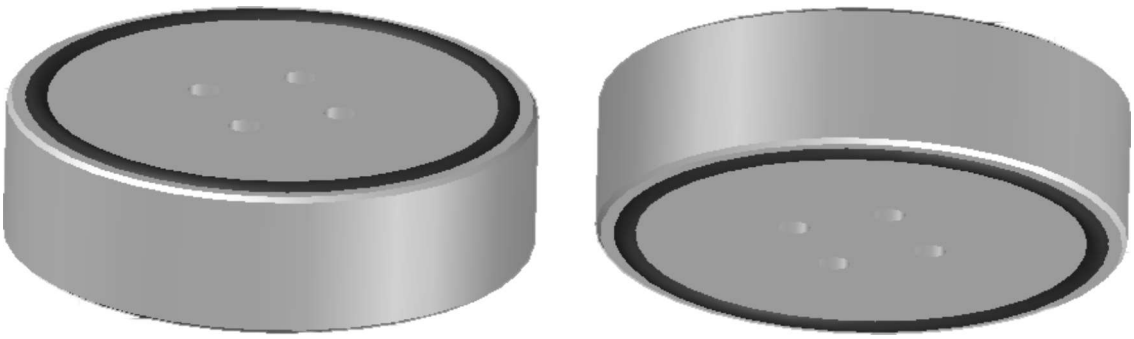

11. Check anti slam O-rings top and bottom and replace if necessary.

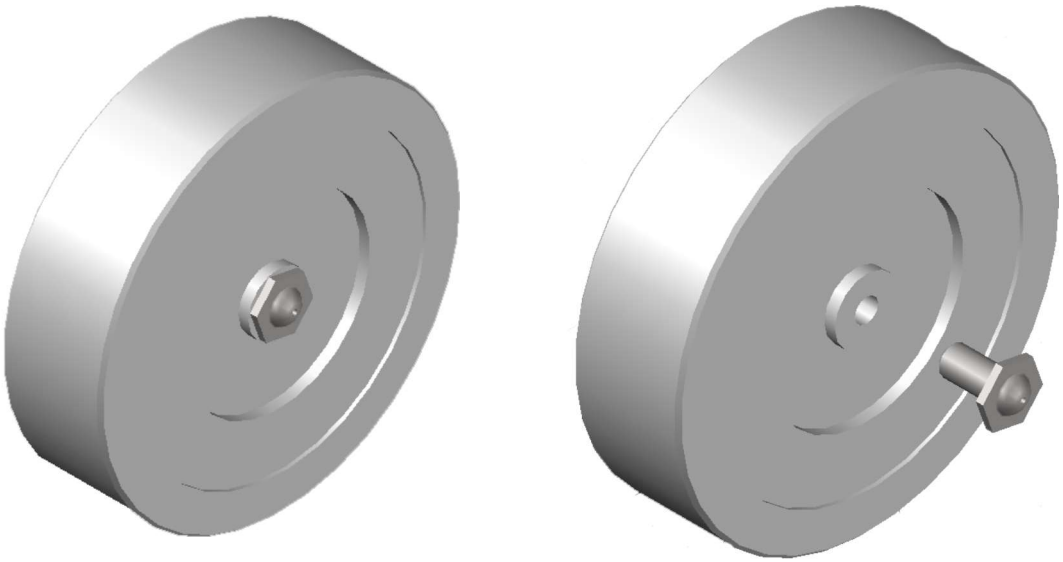

12. Check nozzle for blockages. This can be simply done by holding the nozzle up to the sun and seeing if light is visible through the orifice. If the nozzle is blocked then clean with thin wire or paperclip. If the nozzle is damaged, remove and replace.

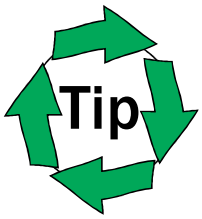

If you do not have a spare nozzle seat available simply flip the existing seat over

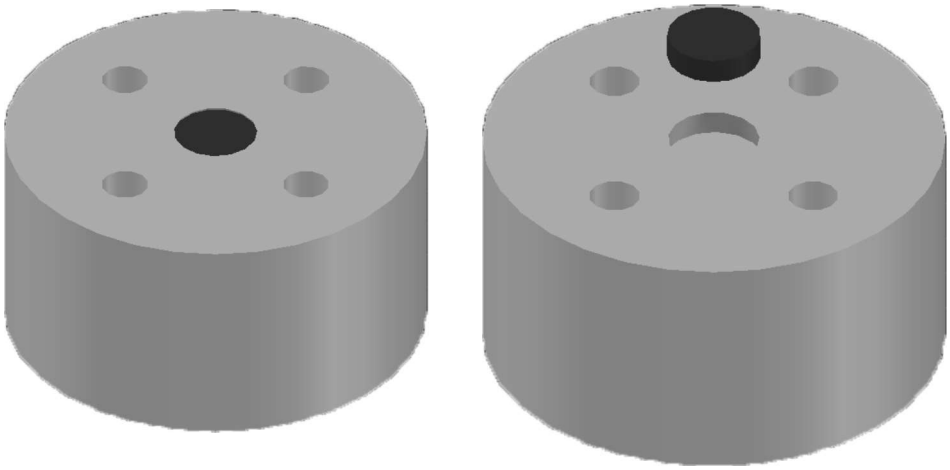

13. Check the Nozzle Seat in the lower float for any damage, to the surface, remove and replace.

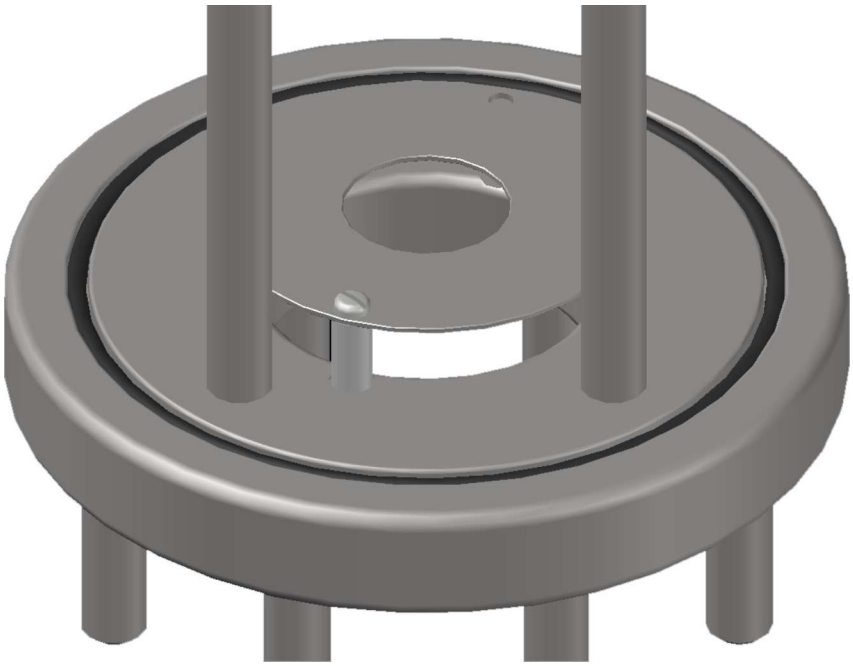

14. Check bottom flange barrel O-ring and replace if necessary.

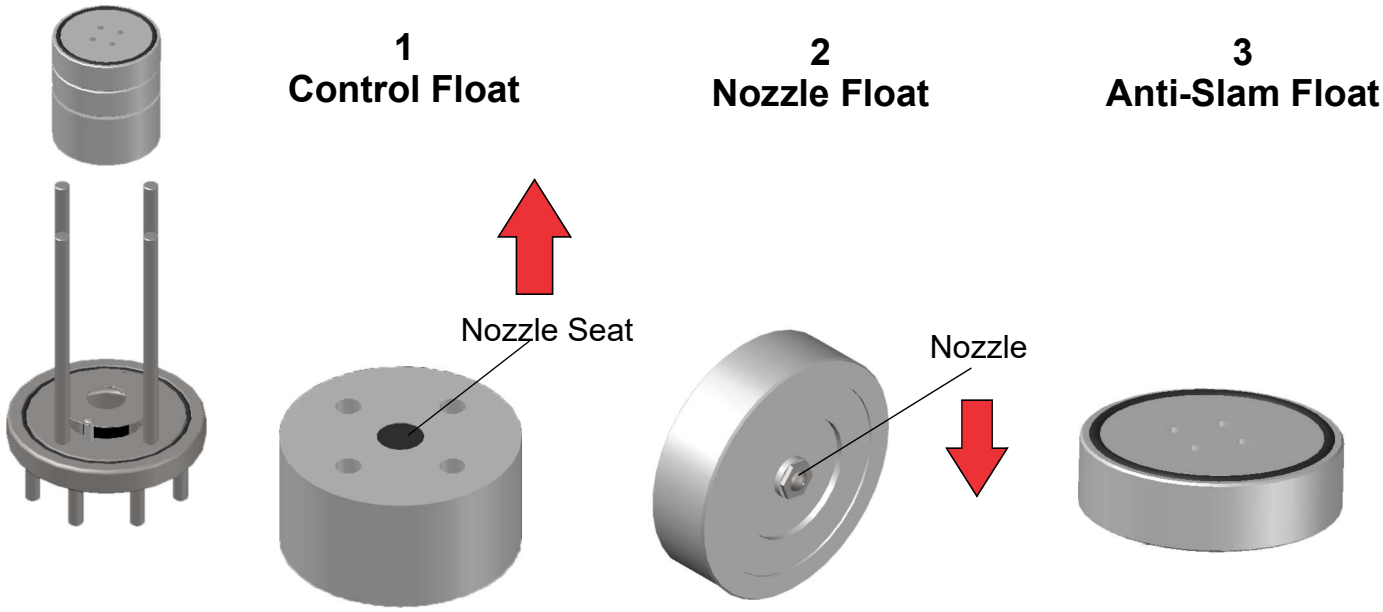

15. Replace the float stack, control float (lower float) first with the nozzle seat facing upward. Then the nozzle float with nozzle facing downwards and finally the anti slam float. Making sure that one O-ring makes contact with the surface of the nozzle float.

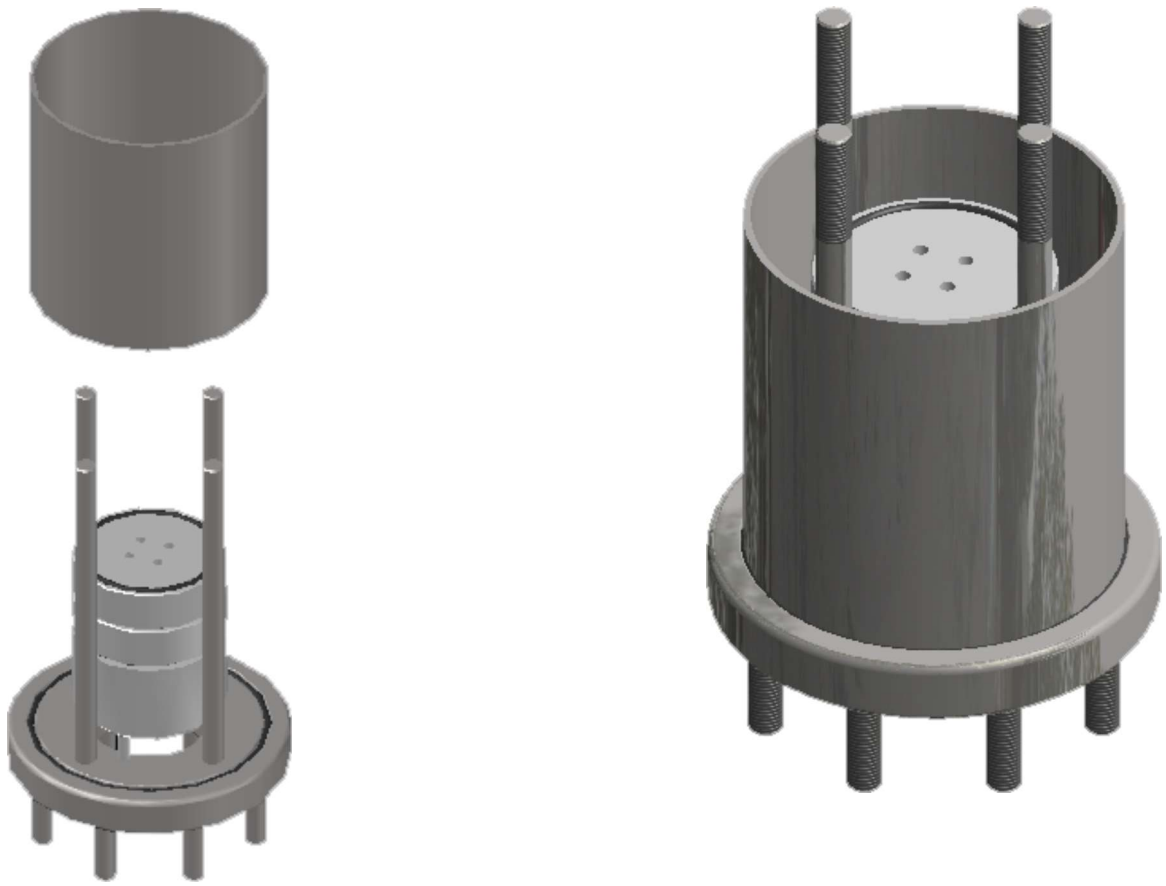

16. Replace barrel. Make sure the barrel is in the O-ring groove and centered on the O-ring.

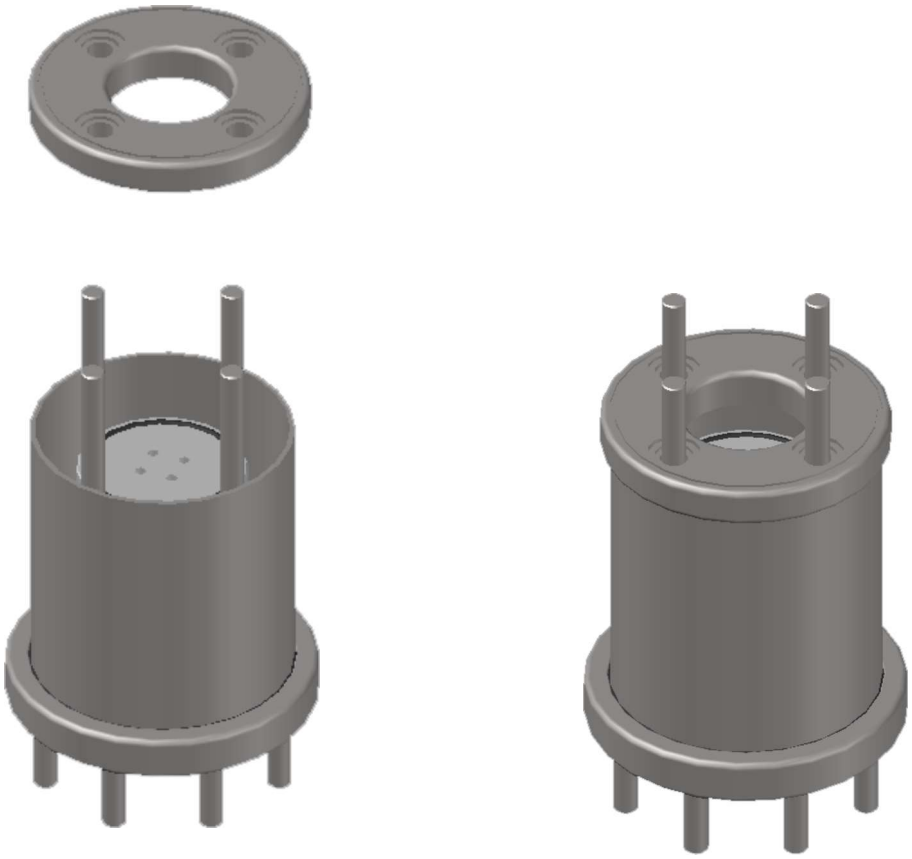

17. Replace the top flange, making sure the barrel fits snugly into the O-ring groove and does not slide to the extreme side of the bottom flange O-ring groove while fitting. If the barrel has moved, lightly tap until centered again.

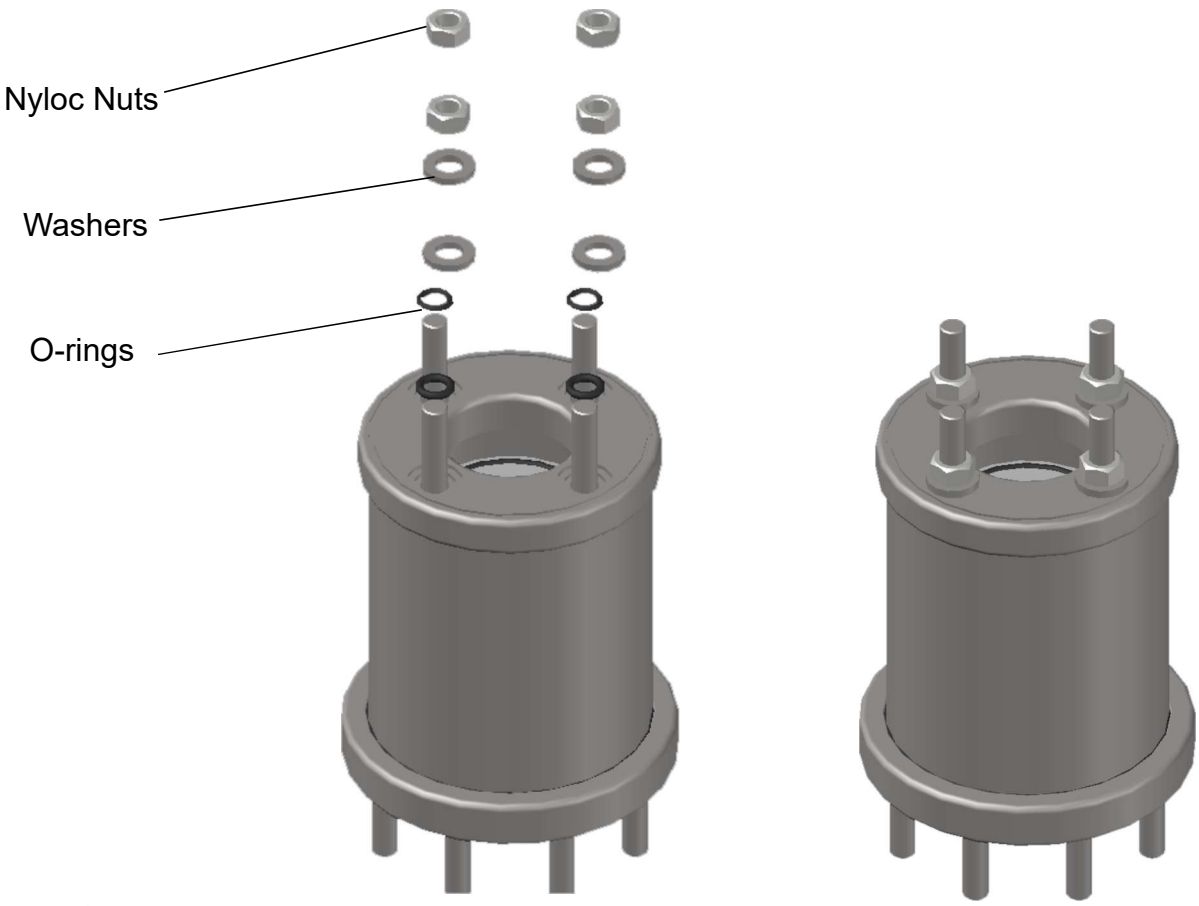

18. Replace O-rings, then washers, then nyloc nuts.

19. Replace the screen mesh, making sure the mesh fits snugly into the mesh groove.

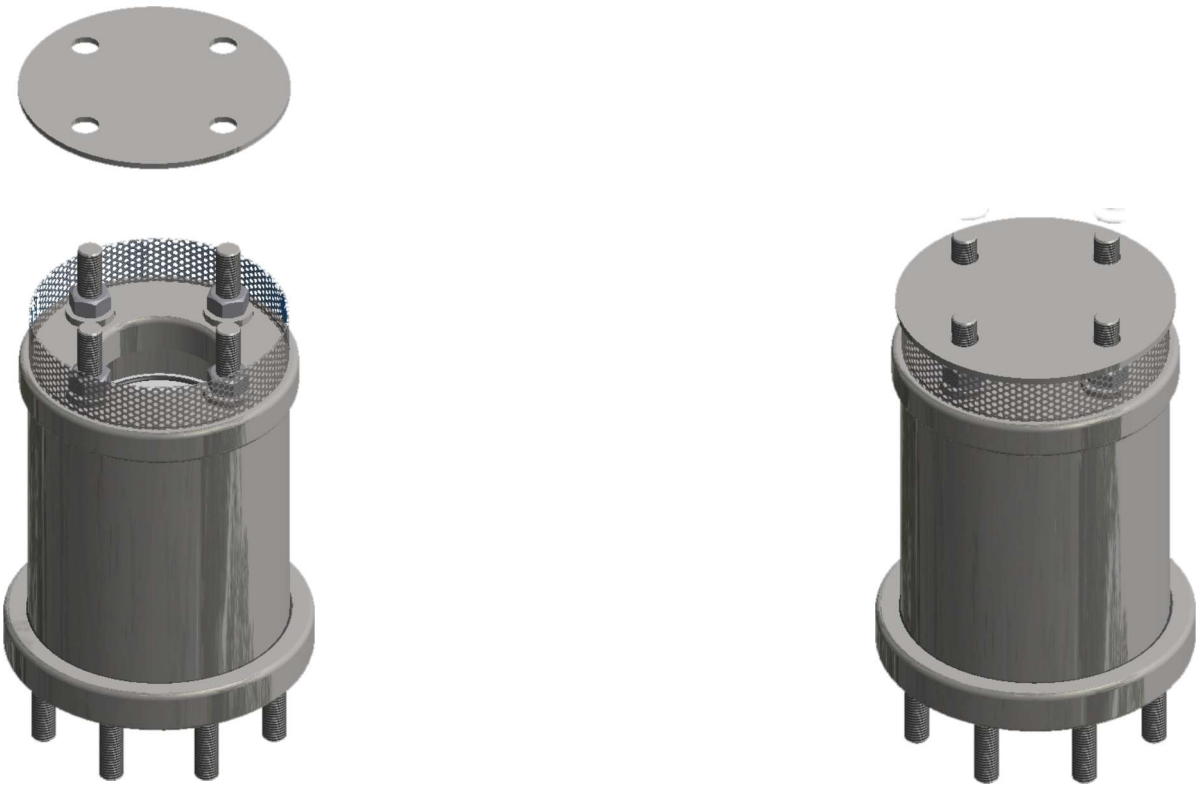

20. Replace the top cap.

21. Replace nuts. Hand or lightly tighten. There is no need to torque these nuts, they are there to keep the top cap on only.

22. Reopen the isolating valve slowly. Be aware that high air discharge may occur when reopening and that some spray may occur as pressure builds in the valve.

revision 0003 1220