CLA-VAL
AUTOMATIC CONTROL VALVES

136-03/636-03

Place this manual with personnel responsible for maintenance of this valve

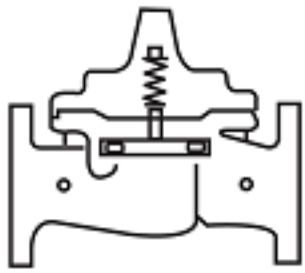

Installation

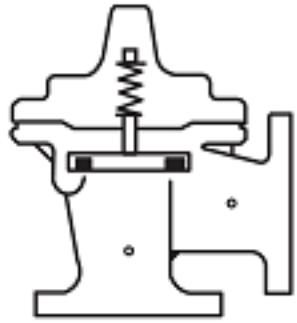

Operation

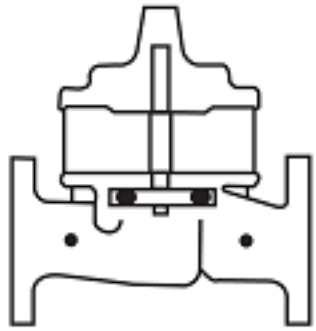

Maintenance

CLA-VAL • 1701 Placentia Avenue • Costa Mesa, CA 92627 • (949) 722-4800 • info@cla-val.com
CLA-VAL CANADA LTD. • 4687 Christie Drive • Beamsville, Ontario, LOR 1B4 Canada • (905) 563-4963
www.cla-val.com • info@cla-val.com

CLA-VAL

—MODEL— 100-01 Hytrol Valve

Description

The Cla-Val Model 100-01 Hytrol Valve is a main valve for Cla-Val Automatic Control Valves. It is a hydraulically operated, diaphragm-actuated, globe or angle pattern valve.

This valve consists of three major components; body, diaphragm assembly, and cover. The diaphragm assembly is the only moving part. The diaphragm assembly uses a diaphragm of nylon fabric bonded with synthetic rubber. A synthetic rubber disc, contained on three and one half sides by a disc retainer and disc guide, forms a seal with the valve seat when pressure is applied above the diaphragm. The diaphragm assembly forms a sealed chamber in the upper portion of the valve, separating operating pressure from line pressure.

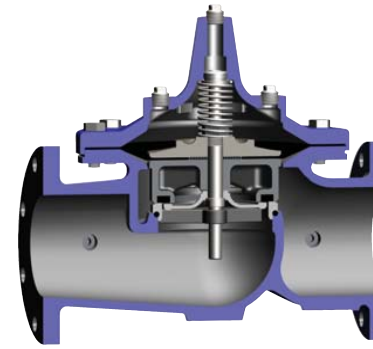

Installation

1. Before valve is installed, pipe lines should be flushed of all chips, scale and foreign matter.
2. It is recommended that either gate or block valves be installed on both ends of the 100-01 Hytrol Valve to facilitate isolating the valve for preventive maintenance and repairs.
3. Place the valve in the line with flow through the valve in the direction indicated on the inlet nameplate. (See “Flow Direction” Section) **Note: Valve can be installed in the vertical or horizontal position.**
4. Allow sufficient room around valve to make adjustments and for disassembly.
5. Cla-Val 100-01 Hytrol Valves operate with maximum efficiency when mounted in horizontal piping with the cover UP, however, other positions are acceptable. Due to size and weight of the cover and internal components of 8 inch and larger valves, installation with the cover UP is advisable. This makes internal parts readily accessible for periodic inspection.
6. Caution must be taken in the installation of this valve to insure that galvanic and/or electrolytic action does not take place. The proper use of dielectric fittings and gaskets are required in all systems using dissimilar metals.
7. If a pilot control system is installed on the 100-01 Hytrol Valve, use care to prevent damage. If it is necessary to remove fittings or components, be sure they are kept clean and replaced exactly as they were.
8. After the valve is installed and the system is first pressurized, vent air from the cover chamber and pilot system tubing by loosening fittings at all high points.

Principles of Operation

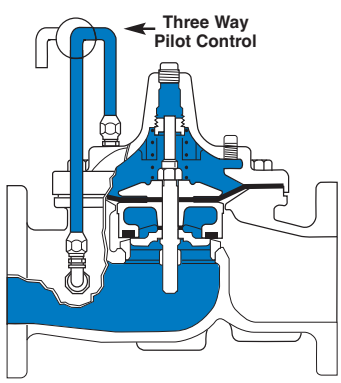

Tight Closing Operation
When pressure from the valve inlet (or an equivalent independent operating pressure) is applied to the diaphragm chamber the valve closes drip-tight.

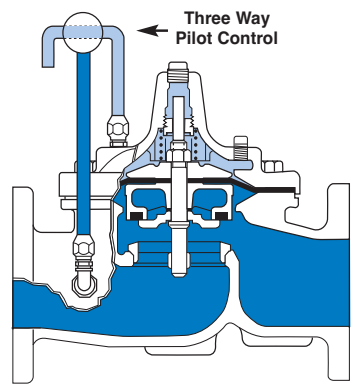

Full Open Operation
When pressure in diaphragm chamber is relieved to a zone of lower pressure (usually atmosphere) the line pressure (5 psi Min.) at the valve inlet opens the valve.

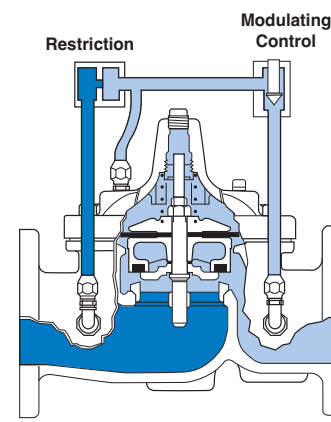

Modulating Action
Valve modulates when diaphragm pressure is held at an intermediate point between inlet and discharge pressure. With the use of a Cla-Val. "modulating control," which reacts to line pressure changes, the pressure above the diaphragm is varied, allowing the valve to throttle and compensate for the change.

Flow Direction

The flow through the 100-01 Hytrol Valve can be in one of two directions. When flow is “up-and-over the seat,” it is in “normal” flow and the valve will fail in the open position. When flow is “over-the seat-and down,” it is in “reverse” flow and the valve will fail in the closed position. There are no permanent flow arrow markings. **The valve must be installed according to nameplate data.**

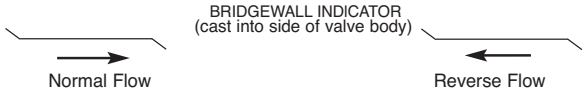

Recommended Tools

1. Three pressure gauges with ranges suitable to the installation to be put at Hytrol inlet, outlet and cover connections.

2. Cla-Val Model X101 Valve Position Indicator. This provides visual indication of valve position without disassembly of valve.

3. Other items are: suitable hand tools such as screwdrivers, wrenches, etc. soft jawed (brass or aluminum) vise, 400 grit wet or dry sandpaper and water for cleaning.

Troubleshooting

The following troubleshooting information deals strictly with the Model 100-01 Hytrol Valve. This assumes that all other components of the pilot control system have been checked out and are in proper working condition. (See appropriate sections in Technical Manual for complete valve).

All trouble shooting is possible without removing the valve from the line or removing the cover. It is highly recommended to permanently install a Model X101 Valve Position Indicator and three gauges in unused Hytrol inlet, outlet and cover connections.

SYMPTOM	PROBABLE CAUSE	REMEDY
Fails to Close	Closed isolation valves in control system, or in main line.	Open Isolation valves.
	Lack of cover chamber pressure.	Check upstream pressure, pilot system, strainer, tubing, valves, or needle valves for obstruction.
	Diaphragm damaged. (See Diaphragm Check.)	Replace diaphragm.
	Diaphragm assembly inoperative. Corrosion or excessive scale build up on valve stem. (See Freedom of Movement Check)	Clean and polish stem. Inspect and replace any damaged or badly eroded part.
	Mechanical obstruction. Object lodged in valve. (See Freedom of Movement Check)	Remove obstruction.
	Worn disc. (See Tight Sealing Check)	Replace disc.
	Badly scored seat. (See Tight Sealing Check)	Replace seat.
Fails to Open	Closed upstream and/or downstream isolation valves in main line.	Open isolation valves.
	Insufficient line pressure.	Check upstream pressure. (Minimum 5 psi flowing line pressure differential.)
	Diaphragm assembly inoperative. Corrosion or excessive buildup on valve stem. (See Freedom of Movement Check)	Clean and polish stem. Inspect and replace any damaged or badly eroded part.
	Diaphragm damaged. (For valves in "reverse flow" only)	Replace diaphragm.

After checking out probable causes and remedies, the following three checks can be used to diagnose the nature of the problem before maintenance is started. They must be done in the order shown.

Three Checks

The 100-01 Hytrol Valve has only one moving part (the diaphragm and disc assembly). So, there are only three major types of problems to be considered.

First: Valve is stuck - that is, the diaphragm assembly is not free to move through a full stroke either from open to close or vice versa.

Second: Valve is free to move and can’t close because of a worn out diaphragm.

Third: Valve leaks even though it is free to move and the diaphragm isn’t leaking.

CAUTION:
Care should be taken when doing the troubleshooting checks on the 100-01 Hytrol Valve. These checks do require the valve to open fully. This will either allow a high flow rate through the valve, or the downstream pressure will quickly increase to the inlet pressure. In some cases, this can be very harmful. Where this is the case, and there are no block valves in the system to protect the downstream piping, it should be realized that ***the valve cannot be serviced under pressure.*** *Steps should be taken to remedy this situation before proceeding any further.*

Diaphragm Check (#1)

1. Shut off pressure to the Hytrol Valve by slowly closing upstream and downstream isolation valves. **SEE CAUTION**.

2. Disconnect or close all pilot control lines to the valve cover and leave only one fitting in highest point of cover open to atmosphere.

3.With the cover vented to atmosphere, slowly open upstream isolation valve to allow some pressure into the Hytrol Valve body. Observe the open cover tapping for signs of continuous flow. It is not necessary to fully open isolating valve. Volume in cover chamber capacity chart will be displaced as valve moves to open position. Allow sufficient time for diaphragm assembly to shift positions. If there is no continuous flow, you can be quite certain the diaphragm is sound and the diaphragm assembly is tight. If the fluid appears to flow continuously this is a good reason to believe the diaphragm is either damaged or it is loose on the stem. In either case, this is sufficient cause to remove the valve cover and investigate the leakage. (See "Maintenance" Section for procedure.)

COVER CHAMBER CAPACITY
(Liquid Volume displaced when valve opens)

Valve size (inches)	Displacement	
	Gallons	Liters
1 1/4	.020	.07
1 1/2	.020	.07
2	.032	.12
2 1/2	.043	.16
3	.080	.30
4	.169	.64
6	.531	2.0
8	1.26	4.8
10	2.51	9.5
12	4.00	15.1
14	6.50	24.6
16	9.57	36.2
20	12.00	45.4
24	29.00	109.8
30	42.00	197.0
36	90.00	340.0

Freedom of Movement Check (#2)

4. Determining the Hytrol Valve's freedom of movement can be done by one of two methods.

5. For most valves it can be done after completing Diaphragm Check (Steps 1, 2, and 3). **SEE CAUTION**. At the end of step 3 the valve should be fully open.

6. If the valve has a Cla-Val X101 Position Indicator, observe the indicator to see that the valve opens wide. Mark the point of maximum opening.

7. Re-connect enough of the control system to permit the application of inlet pressure to the cover. Open pilot system cock so pressure flows from the inlet into the cover.

8. While pressure is building up in the cover, the valve should close smoothly. There is a hesitation in every Hytrol Valve closure, which can be mistaken for a mechanical bind. The stem will appear to stop moving very briefly before going to the closed position. This slight pause is caused by the diaphragm flexing at a particular point in the valve's travel and is not caused by a mechanical bind.

9. When closed, a mark should be made on the X101 Valve position indicator corresponding to the "closed" position. The distance between the two marks should be approximately the stem travel shown in chart.

STEM TRAVEL
(Fully Open to Fully Closed)

Valve Size (inches)		Travel (inches)	
Inches	MM	Inches	MM
1 1/4	32	0.4	10
1 1/2	40	0.4	10
2	50	0.6	15
2 1/2	65	0.7	18
3	80	0.8	20
4	100	1.1	28
6	150	1.7	43
8	200	2.3	58
10	250	2.8	71
12	300	3.4	86
14	350	4.0	100
16	400	4.5	114
20	500	5.6	143
24	600	6.7	165
30	800	7.5	190
36	900	8.5	216

10. If the stroke is different than that shown in stem travel chart this is a good reason to believe something is mechanically restricting the stroke of the valve at one end of its travel. If the flow does not stop through the valve when in the indicated "closed" position, the obstruction probably is between the disc and the seat. If the flow does stop, then the obstruction is more likely in the cover. In either case, the cover must be removed, and the obstruction located and removed. The stem should also be checked for scale build-up. (See "Maintenance, section for procedure.)

11. For valves 6" and smaller, the Hytrol Valve's freedom of movement check can also be done after all pressure is removed from the valve. **SEE CAUTION**. After closing inlet and outlet isolation valves and bleeding pressure from the valve, check that the cover chamber and the body are temporarily vented to atmosphere. Insert fabricated tool into threaded hole in top of valve stem, and lift the diaphragm assembly manually. Note any roughness. The diaphragm assembly should move smoothly throughout entire valve stroke. The tool is fabricated from rod that is threaded on one end to fit valve stem and has a "T" bar handle of some kind on the other end for easy gripping. (See chart in Step 4 of "Disassembly" Section.)

12. Place marks on this diaphragm assembly lifting tool when the valve is closed and when manually positioned open. The distance between the two marks should be approximately the stem travel shown in stem travel chart. If the stroke is different than that shown, there is a good reason to believe something is mechanically restricting the stroke of the valve. The cover must be removed, and the obstruction located and removed. The stem should also be checked for scale build-up. (See "Maintenance" Section for procedure.)

Tight Sealing Check (#3)

13. Test for seat leakage after completing checks #1 & #2 (Steps 1 to 12). **SEE CAUTION.** Close the isolation valve downstream of the Hytrol Valve. Apply inlet pressure to the cover of the valve, wait until it closes. Install a pressure gauge between the two closed valves using one of the two ports in the outlet side of the Hytrol. Watch the pressure gauge. If the pressure begins to climb, then either the downstream isolation valve is permitting pressure to creep back, or the Hytrol is allowing pressure to go through it. Usually the pressure at the Hytrol inlet will be higher than on the isolation valve discharge, so if the pressure goes up to the inlet pressure, you can be sure the Hytrol is leaking. Install another gauge downstream of isolating valve. If the pressure between the valves only goes up to the pressure on the isolation valve discharge, the Hytrol Valve is holding tight, and it was just the isolation valve leaking.

Maintenance

Preventative Maintenance

The Cla-Val Co. Model 100-01 Hytrol Valve requires no lubrication or packing and a minimum of maintenance. However, a periodic inspection schedule should be established to determine how the operating conditions of the system are affecting the valve. The effect of these actions must be determined by inspection.

Disassembly

Inspection or maintenance can be accomplished without removing the valve from the line. Repair kits with new diaphragm and disc are recommended to be on hand before work begins.

WARNING: Maintenance personnel can be injured and equipment damaged if disassembly is attempted with pressure in the valve. **SEE CAUTION.**

1. Close upstream and downstream isolation valves **and independent operating pressure when used** to shut off all pressure to the valve.

2. Loosen tube fittings in the pilot system to remove pressure from valve body and cover chamber. After pressure has been released from the valve, use care to remove the controls and tubing. Note and sketch position of tubing and controls for re-assembly. The schematic in front of the Technical Manual can be used as a guide when reassembling pilot system.

3. Remove cover nuts and remove cover. If the valve has been in service for any length of time, chances are the cover will have to be loosened by driving upward along the edge of the cover with a **dull** cold chisel.

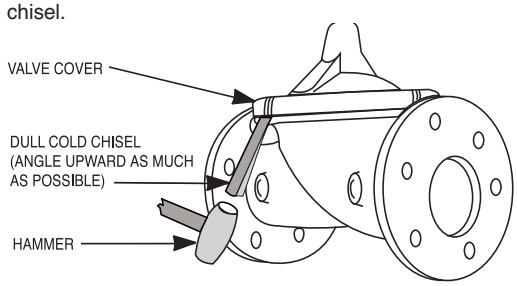

On 6” and smaller valves block and tackle or a power hoist can be used to lift valve cover by inserting proper size eye bolt in place of the center cover plug. on 8” and larger valves there are 4 holes (5/8” — 11 size) where jacking screws and/or eye bolts may be inserted for lifting purposes. **Pull cover straight up** to keep from damaging the integral seat bearing and stem.

COVER CENTER PLUG SIZE

Valve Size	Thread Size (NPT)
1 1/4"—1 1/2"	1/4"
2"—3"	1/2"
4"—6"	3/4"
8"—10"	1"
12"	1 1/4"
14"	1 1/2"
16"	2"
20” & 24"	2"
30” & 36”	2”

4. Remove the diaphragm and disc assembly from the valve body. With smaller valves this can be accomplished by hand by **pulling straight up on the stem so as not to damage the seat bearing.** On large valves, an eye bolt of proper size can be installed in the stem and the diaphragm assembly can be then lifted with a block and tackle or power hoist. Take care not to damage the stem or bearings. The valve won't work if these are damaged.

VALVE STEM THREAD SIZE

Valve Size	Thread Size (UNF Internal)
1 1/4"—2 1/2"	10—32
3"—4"	1/4—28
6"—14"	3/8—24
16"	1/2—20
20	3/4-16
24"	3/4-16
30”	3/4-16
36”	3/4-16

5. The next item to remove is the stem nut. Examine the stem threads above the nut for signs of mineral deposits or corrosion. If the threads are not clean, use a wire brush to remove as much of the residue as possible. Attach a good fitting wrench to the nut and give it a sharp “rap” rather than a steady pull. Usually several blows are sufficient to loosen the nut for further removal. On the smaller valves, the entire diaphragm assembly can be held by the stem in a vise **equipped with soft brass jaws** before removing the stem nut.

The use of a pipe wrench or a vise without soft brass jaws scars the fine finish on the stem. No amount of careful dressing can restore the stem to its original condition. Damage to the finish of the stem can cause the stem to bind in the bearings and the valve will not open or close.

6. After the stem nut has been removed, the diaphragm assembly breaks down into its component parts. Removal of the disc from the disc retainer can be a problem if the valve has been in service for a long time. Using two screwdrivers inserted along the outside edge of the disc usually will accomplish its removal. Care should be taken to preserve the spacer washers in water, particularly if no new ones are available for re-assembly.

7. The only part left in the valve body is the seat which ordinarily does not require removal. Careful cleaning and polishing of inside and outside surfaces with 400 wet/dry sandpaper will usually restore the seat’s sharp edge. If, however, it is badly worn and replacement is necessary, it can be easily removed.

Seats in valve sizes 1 1/4” through 6” are threaded into the valve body. They can be removed with accessory X109 Seat Removing Tool available from the factory. On 8” and larger valves, the seat is held in place by flat head machine screws. Use a tight-fitting, long shank screwdriver to prevent damage to seat screws. If upon removal of the screws the seat cannot be lifted out, it will be necessary to use a piece of angle or channel iron with a hole drilled in the center. Place it across the body so a long stud can be inserted through the center hole in the seat and the hole in the angle iron. By tightening the nut a uniform upward force is exerted on the seat for removal.

NOTE: Do not lift up on the end of the angle iron as this may force the integral bearing out of alignment, causing the stem to bind.

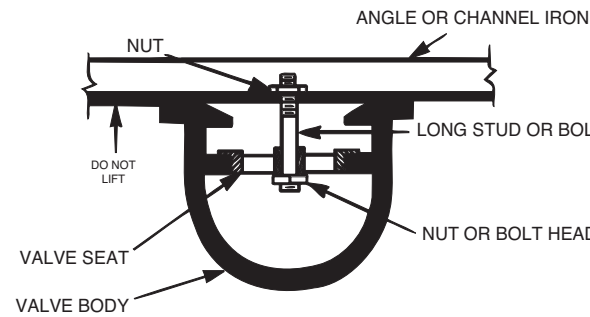

Lime Deposits

One of the easiest ways to remove lime deposits from the valve stem or other metal parts is to dip them in a 5-percent muriatic acid solution just long enough for the deposit to dissolve. This will remove most of the common types of deposits. **CAUTION: USE EXTREME CARE WHEN HANDLING ACID.** Rinse parts in water before handling. If the deposit is not removed by acid, then a fine grit (400) wet or dry sandpaper can be used with water.

Inspection of Parts

After the valve has been disassembled, each part should be examined carefully for signs of wear, corrosion, or any other abnormal condition. Usually, it is a good idea to replace the rubber parts (diaphragm and disc) unless they are free of signs of wear. These are available in a repair kit. Any other parts which appear doubtful should be replaced. WHEN ORDERING PARTS, BE SURE TO GIVE COMPLETE NAMEPLATE DATA, ITEM NUMBER AND DESCRIPTION.

NOTE: If a new disc isn't available, the existing disc can be turned over, exposing the unused surface for contact with the seat. The disc should be replaced as soon as practical.

Reassembly

1. Reassembly is the reverse of the disassembly procedure. If a new disc has been installed, it may require a different number of spacer washers to obtain the right amount of "grip" on the disc. When the diaphragm assembly has been tightened to a point where the diaphragm cannot be twisted, the disc should be compressed very slightly by the disc guide. Excessive compression should be avoided. Use just enough spacer washers to hold the disc firmly without noticeable compression.

2. MAKE SURE THE STEM NUT IS VERY TIGHT. Attach a good fitting wrench to the nut and give it a sharp "rap" rather than a steady pull. Usually several blows are sufficient to tighten the stem nut for final tightening. Failure to do so could allow the diaphragm to pull loose and tear when subjected to pressure.

3. Carefully install the diaphragm assembly by lowering the stem through the seat bearing. Take care not to damage the stem or bearing. Line up the diaphragm holes with the stud or bolt holes on the body. on larger valves with studs, it may be necessary to hold the diaphragm assembly up part way while putting the diaphragm over the studs.

4. Put spring in place and replace cover. Make sure diaphragm is lying smooth under the cover.

5. Tighten cover nuts firmly using a cross-over pattern until all nuts are tight.

6. Test Hytrol Valve before re-installing pilot valve system.

Test Procedure After Valve Assembly

There are a few simple tests which can be made in the field to make sure the Hytrol Valve has been assembled properly. Do these before installing pilot system and returning valve to service. These are similar to the three troubleshooting tests.

1. Check the diaphragm assembly for freedom of movement after all pressure is removed from the valve. **SEE CAUTION.** Insert fabricated tool into threaded hole in top of valve stem, and lift the diaphragm assembly manually. Note any roughness, sticking or grabbing. The diaphragm assembly should move smoothly throughout entire valve stroke. The tool is fabricated from rod that is threaded on one end to fit valve stem (See chart in Step 4 of "Disassembly" section.) and has a "T" Bar handle of some kind on the other end for easy gripping.

Place marks on this diaphragm assembly lifting tool when the valve is closed and when manually positioned open. The distance between the two marks should be approximately the stem travel shown in stem travel chart. (See "Freedom of Movement Check" section.) If the stroke is different than that shown, there is a good reason to believe something is mechanically restricting the stroke of the valve. The cover must be removed, the obstruction located and removed. (See "Maintenance" Section for procedure.)

Due to the weight of the diaphragm assembly this procedure is not possible on valves 8" and larger. on these valves, the same determination can be made by carefully introducing a low pressure-less than five psi) into the valve body with the cover vented. **SEE CAUTION**. Looking in cover center hole see the diaphragm assembly lift easily without hesitation, and then settle back easily when the pressure is removed.

2. To check the valve for drip-tight closure, a line should be connected from the inlet to the cover, and pressure applied at the inlet of the valve. If properly assembled, the valve should hold tight with as low as ten PSI at the inlet. See "Tight Sealing Check" section.)

3. With the line connected from the inlet to the cover, apply full working pressure to the inlet. Check all around the cover for any leaks. Re-tighten cover nuts if necessary to stop leaks past the diaphragm.

4. Remove pressure, then re-install the pilot system and tubing exactly as it was prior to removal. **Bleed air from all high points.**

5. Follow steps under "Start-Up and Adjustment" Section in Technical Manual for returning complete valve back to service.

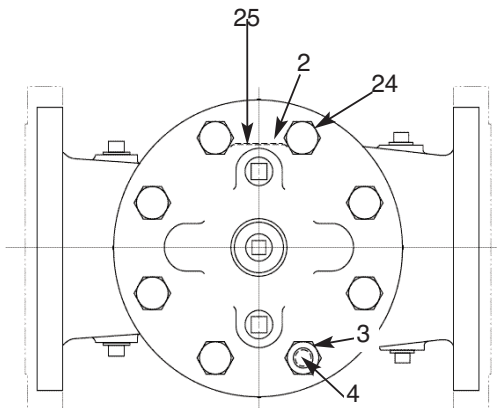

TOP VIEW

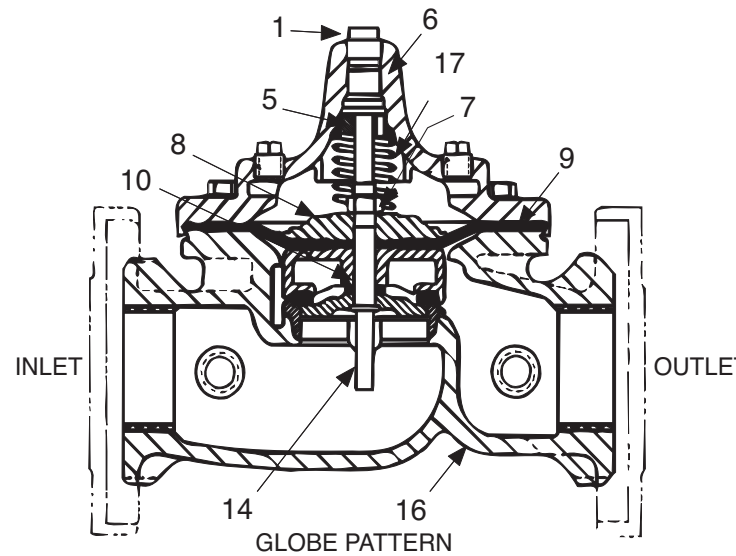

GLOBE PATTERN

PARTS LIST

Item	Description
1.	Pipe Plug
2.	Drive Screws (for nameplate)
3.	Hex Nut (8” and larger)
4.	Stud (8” and larger)
5.	Cover Bearing
6.	Cover
7.	Stem Nut
8.	Diaphragm Washer
9.	Diaphragm
10.	Spacer Washers
11.	Disc Guide
12.	Disc Retainer
13.	Disc
14.	Stem
15.	Seat
16.	Body
17.	Spring
22.	Flat Head Screws (8” and larger)
23.	Seat O-Ring
24.	Hex head Bolt (1 1/4” thru 4”)
25.	Nameplate
26.	Upper Spring Washer (Epoxy coated valves only)
27.	Lower Spring Washer (Epoxy coated valves only)
28.	Cover Bearing Housing (16” only)
29.	Cover O-Ring (16’” only)
30.	Hex Bolt (16” only)
31.	Pipe Cap (16” only)

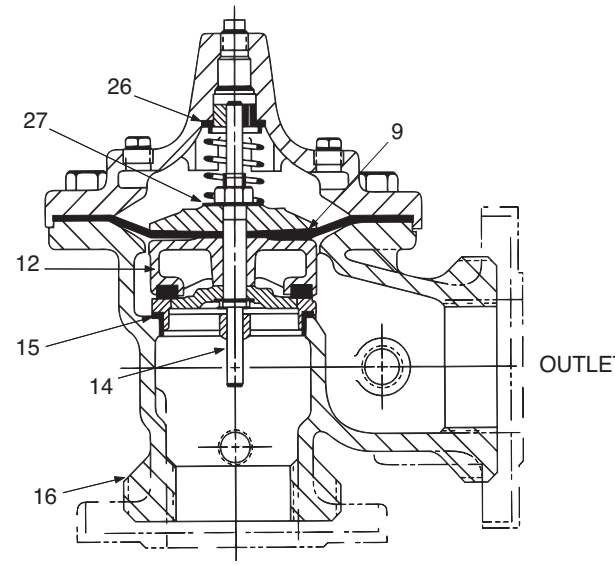

INLET
ANGLE PATTERN

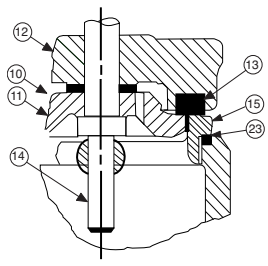

1 1/4" - 6" SEAT DETAIL

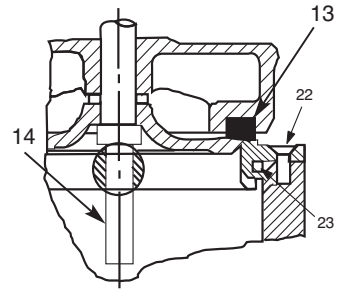

8" - 24" SEAT DETAIL

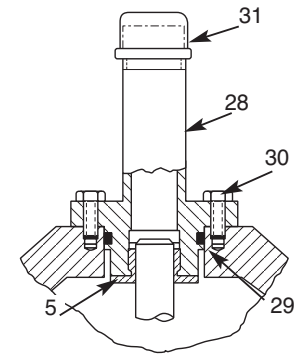

16" COVER DETAIL

CLA-VAL

—MODEL— 100-01
Hytrol Valve Service Data

Description 100-01 Hytrol Valve

The Cla-Val Model 100-01 Hytrol Valve is a main valve for Cla-Val Automatic Control Valves. It is a hydraulically operated, diaphragm-actuated, globe or angle pattern valve.

This valve consists of three major components; body, diaphragm assembly, and cover. The diaphragm assembly is the only moving part. The diaphragm assembly uses a diaphragm of nylon fabric bonded with synthetic rubber. A synthetic rubber disc, contained on three and one half sides by a disc retainer and disc guide, forms a seal with the valve seat when pressure is applied above the diaphragm. The diaphragm assembly forms a sealed chamber in the upper portion of the valve, separating operating pressure from line pressure.

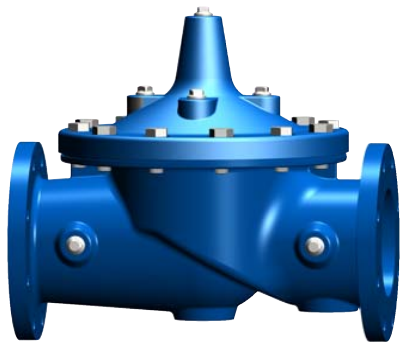

Description 100-20 600 Series Hytrol Valve

The Cla-Val Model 100-20 Hytrol Valve (600 Series main valve) have only one part -the body- that is different from standard 100 Series Cla-Val main valve parts. The remaining parts of the 600 series main valve are standard Cla-Val main valve parts. All service and maintenance information for the standard 100 Series main valves also apply to the 600 series main valves.
The most important thing to remember when ordering main valve repair kits and replacement parts, except for the body, all other parts are going to be for a smaller size main valve. Cla-Val identifies main valve parts with the flange size of the standard 100 Series main valve. Refer to the "Main Valve Sizes" chart below.

HYTROL Service Data

HYTROL SIZE				Stem Travel		Cover Capacity Displacement		Valve Stem Thread UNF-Internal	Cover Center Plug NPT	Cover Nut or Bolt			Cover Lifting Holes UNC	Cover Plug		Cover Torque		Stem Nut**		Stem Nut Torque (ft. Lbs.)	
100-01		100-20								Thread (Bolt)	Socket	Qty		Thread	Socket	ft. Lbs.	in. Lbs.	Thread	Socket (Long)	Lubed	DRY
inches	mm	inches	mm	inches	mm	Gallons	Liters														
1"	25			0.3	8				1/4"	1/4" - 20 (B)	7/16"	8				4	48	3/8" - 24		4	6
1 1/4"	32			0.4	10	0.020	0.07	10 - 32	1/4"	5/16" - 18 (B)	1/2"	8				8	96	7/16" -20		6	10
1 1/2"	40			0.4	10	0.020	0.07	10 - 32	1/4"	5/16" - 18 (B)	1/2"	8				8	96	7/16" -20		6	10
2"	50			0.6	15	0.032	0.12	10 - 32	1/2"	3/8" - 16 (B)	9/16"	8		3/8"	7/16"	12		1/2" - 20	3/4"	10	15
2 1/2"	65			0.7	18	0.043	0.16	10 - 32	1/2"	7/16" - 14 (B)	5/8"	8		1/2"	9/16"	20		5/8" - 18	15/16"	21	30
3"	80	4"	100	0.8	20	0.080	0.30	1/4 - 28	1/2"	1/2" - 13 (B)	3/4"	8		1/2"	9/16"	30		5/8" - 18	15/16"	21	30
4"	100	6"	150	1.1	23	0.169	0.64	1/4 - 28	3/4"	3/4" - 10 (B)	1 1/8"	8		3/4"	5/8"	110		3/4" - 16	1 1/16"	40	60
6"	150	8"	200	1.7	43	0.531	2.00	3/8 - 24	3/4"	3/4" - 10 (B)	1 1/8"	12		3/4"	5/8"	110		7/8" - 14	1 5/16"	85	125
8"	200	10"	250	2.3	58	1.26	4.80	3/8 - 24	1"	3/4" - 10	1 1/4"	16	5/8" - 11	1"	13/16"	110		1 1/8" -12	1 13/16"	125	185
10"	250	12"	300	2.8	71	2.51	9.50	3/8 - 24	1"	7/8" - 9	1 7/16"	20	3/4" - 10	1"	13/16"	160		1 1/2" -12	1 7/8"	252	375
12"	300	16"	400	3.4	86	4.0	15.10	3/8 - 24	1 1/4"	1 1/8" - 7	1 13/16"	20	3/4" - 10	1"	13/16"	390		1 1/2" -12	2 1/2"	270	400
14"	350			3.9	99	6.5	24.60	3/8 - 24	1 1/2"	1 1/4" - 7	2"	20	1" - 8	1"	13/16"	545		1 1/2" -12	2 1/2"	280	420
16"	400	20", 24"	600	4.5	114	9.6	36.20	1/2 - 20	2"	1 1/4" - 7	2"	20	1" - 8	1"	13/16"	545		2" - 16	3"	500	750
20"	500			5.63	143	12	45.40	3/4 - 16	1 1/2"	1 3/8" - 6	2 1/8"	24	1" - 8	1"	13/16"	670		2 1/4" - 16	3 1/2"	930	N/R
24"	600	30"	800	6.75	165	29.0	108.80	3/4 - 16*	3/4"	1 1/2" - 12	2 3/8"	24	1 1/8"- 7	1"	13/16"	800		3" - 12	Special	1350	N/R

* Adapter p/n 2594101E inside 1/4" - 28"

Grade 5 Bolts "Heavy" Grade Nuts Tighten cover nuts in a "star" cross-over pattern

** Must Use ONLY Cla-Val Supplied part

BOLT/NUT TORQUING PROCEDURES ON VALVE COVERS

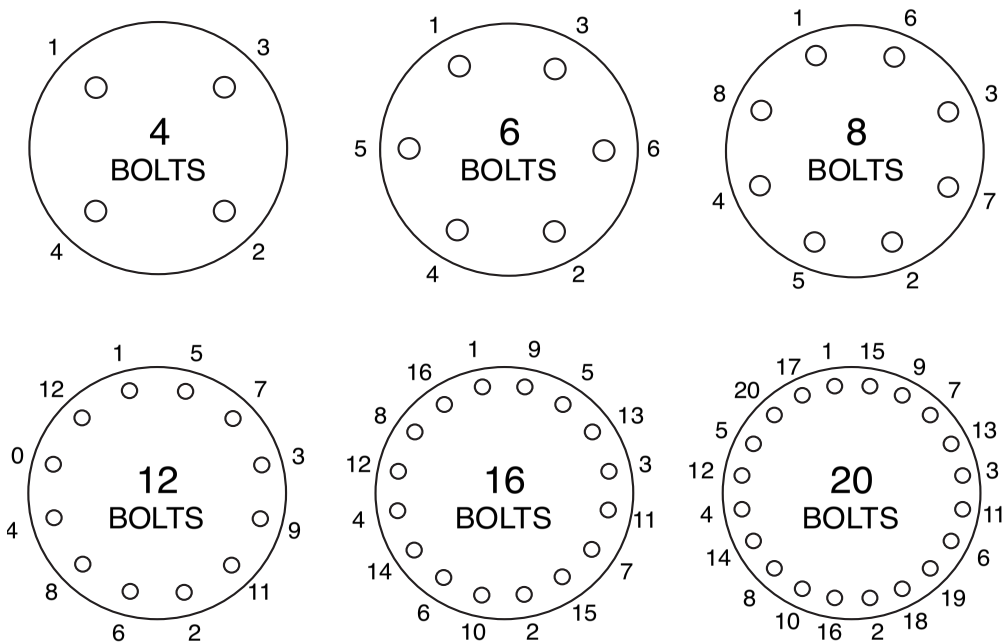

Follow this procedure when reassembling MAIN Valve:

1. Tightens bolts/nuts in a “Star” or “Cross-Over” pattern following the numbers shown above to insure that cover seats evenly on the diaphragm material and body.

2. Torque the bolt/nuts in three stages with a "Star" or "Cross-Over" pattern for each stage:

   A. To approximately 10% of final torque.
   B. To approximately 75% of final torque.
   C. To final required torque.

3. Valves that are to be tested to 375 PSI or higher should be retorqued after 24 hours.

100-01 Hytrol Main Valve Assembly

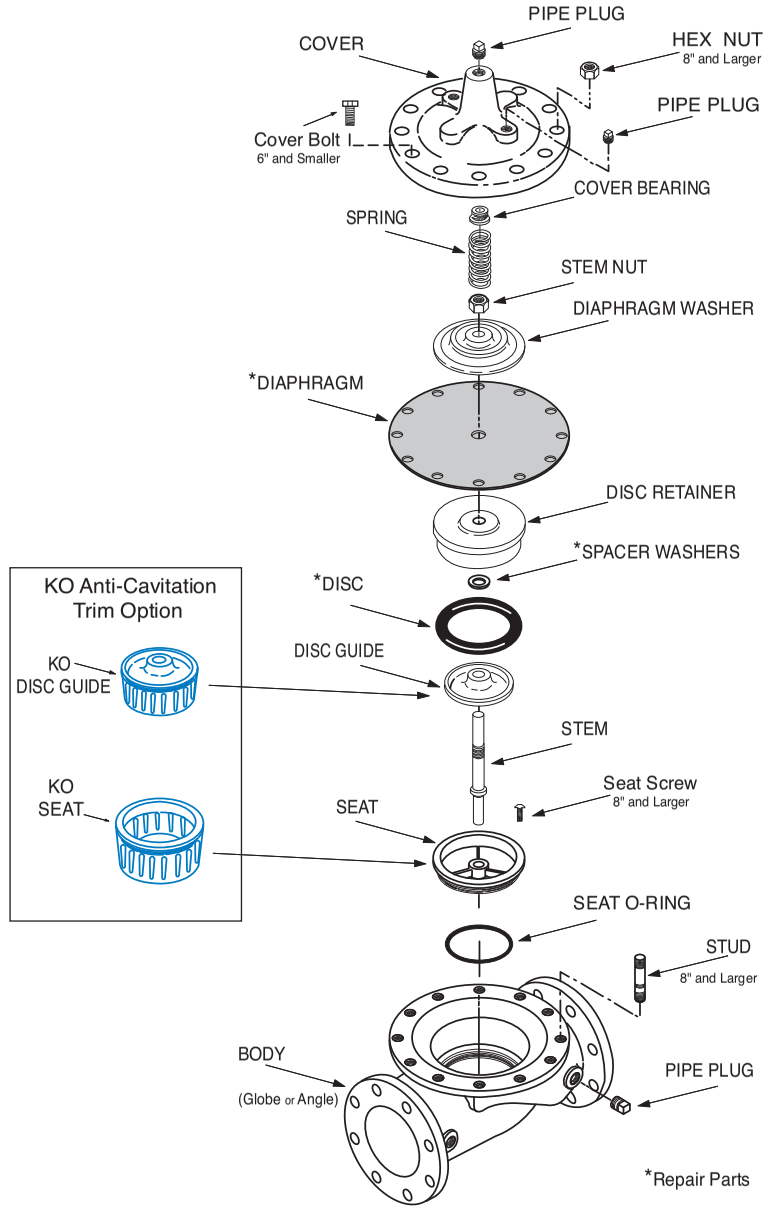

© Copyright Cla-Val 2014 Printed in USA Specifications subject to change without notice.

CLA-VAL

— MODEL — 100-20
(Reduced Internal Port)

600 Series Hytrol Valve

SERVICE AND MAINTENANCE OF 600 SERIES VALVES

The 600 series main valves have only one part -the body- that is different from standard 100 Series Cla-Val main valve parts. The remaining parts of the 600 series main valve are standard Cla-Val main valve parts. All service and maintenance information for the standard 100 Series main valves in this manual also apply to the 600 series main valves.

The most important thing to remember when ordering main valve repair kits and replacement parts, except for the body, all other parts are going to be for a smaller size main valve. Cla-Val identifies main valve parts with the flange size of the standard 100 Series main valve. Refer to the "Main Valve Sizes Comparison" chart. For example, if you are servicing a 6" 100-20 Hytrol and needed a repair kit, you would order a repair kit for a 4" 100-01 Hytrol. This kit is also suitable for a 6" 100-20 Hytrol. Complete Technical Manuals include a repair kit data sheet N-RK that shows this relationship.

When you order repair parts, it is a good idea to include valve nameplate data (size, catalog number, and part number) and description of the parts desired. Do this to be sure parts will fit the valve you are working on and not be too big for it. Pilot controls and repair kits maintenance information remain the same for 100 or 600 Series valves.

UNDERSTANDING THE 600 SERIES VALVES

In 1987, Cla-Val introduced the Model 100-20 Hytrol as the basic main valve for the 600 Series of automatic control valves. To identify all new valves using the 100-20 Hytrol, an existing catalog number is modified. Making a 600 Series catalog number is simply done by using a "6" in front of the two digit catalog numbers or replacing the "2" with a "6" in three digit catalog numbers. Current schematics reflect both catalog numbers together separated by a slash (i.e. - 90-01/690-01, 58-02/658-02, 210-01/610-01, etc). Since these two valves 'share' the same catalog number and schematic, they provide the same function in a system. The only difference between the two valves is the relative capacity of the two main valve series.

The 100-01 Hytrol is the basic main valve for Cla-Val automatic control valves. This valve is the current version of the Clayton Hytrol valve design originated in 1936. The 100-01 Hytrol is designed as a full flow area valve. This means that the inlet, seat and outlet openings are the same size. Thus, the pressure drop is kept to a minimum for this globe style design.

The 100-20 Hytrol valve has all of the basic features and advantages of the original 100-01 Hytrol. Only one part has been changed - the body. It is designed with different size inlet, seat and outlet openings. The 100-20 Hytrol has inlet and outlet flanges one valve size larger than the seat opening size. This results in what is sometimes called a "reduced port' main valve. For example, a 4" 100-20 valve has a 3" seat. Note: valve size is always determined by the flange size. The following chart compares the 100-01 and the 100-20 main valves.

Basic Main Valve Size Comparison		
Globe Pattern Valves		
Flange Size (inch)	Seat Size	
	100-01 (100 Series)	100-20 (600 Series)
3	3	2
4	4	3
6	6	4
8	8	6
10	10	8
12	12	10
14	14	----
16	16	12
18	----	16
20	20	16
24	24	16
30	30	24
36	36	30
42	----	36
48	----	36
Angle Pattern Valves		
Flange Size (inch)	Seat Size	
	100-01 (100 Series)	100-20 (600 Series)
4	4	3
6	6	4
8	8	6

The 100-20 Hytrol is available only in ductile iron, 150 and 300 pressure class, and Bronze trim standard. Available extra cost main valve options include stainless steel trim, epoxy coating, Dura-Kleen stem, Delrin sleeved stem, and high temperature rubber parts. All four basic main valves have a 600 Series version available with all of the same benefits and size relationships. The following chart shows the relationship of Cla-Val main valve catalog numbers.

Cla-Val Main Valves

	Catalog Number		
Catalog Name	Circa 1936	100-Series	600 Series
Hytrol	100 (Angle =2100)	100-01	100-20
Powertrol	100P & 100PA	100-02	100-21
Powercheck	100PC & 100PCA	100-03	100-22
Hycheck	181	100-04	100-23

100-20

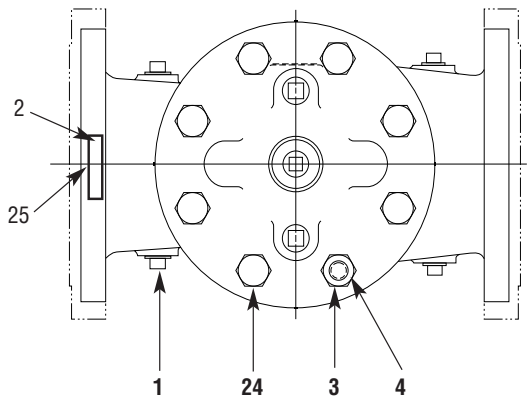

TOP VIEW

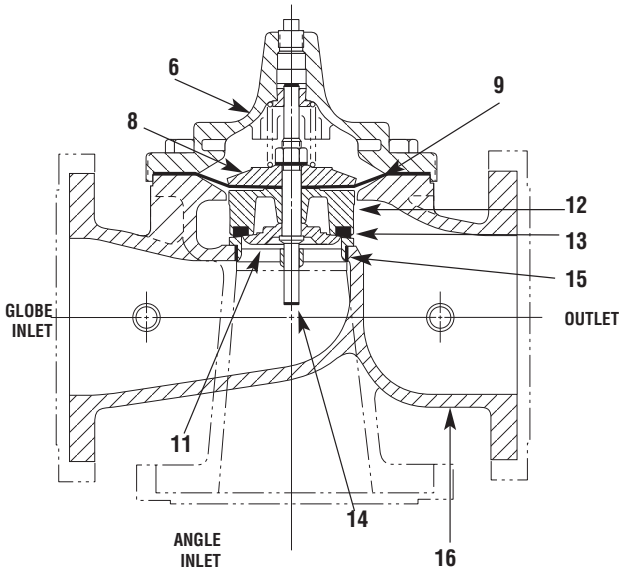

PARTS LIST	
NO.	**DESCRIPTION**
1	Pipe Plug
2	Drive Screws (for nameplate)
3	Hex Nut (8" and larger)
4	Stud (8" and larger)
5	Cover Bearing
6	Cover
7	Stem Nut
8	Diaphragm Washer
9	Diaphragm
10	Spacer Washers
11	Disc Guide
12	Disc Retainer
13	Disc
14	Stem
15	Seat
16	Body
17	Spring
22	Flat Head Screws (10" and larger)
23	Seat O-Ring
24	Hex Bolt (3 " Thru 6")
25	Nameplate (Mounted on inlet flange)
26	Upper Spring Washer (Epoxy coated valves only)
27	Lower Spring Washer (Epoxy coated valves only)
28	Cover Bearing Housing (20" & 24" & 30")
29	Cover Bearing Housing O-Ring (20"& 24" & 30")
30	Hex Bolt (20" & 24")
31	Pipe Cap (20" & 24 & 30"")

WHEN ORDERING PARTS, BE SURE TO GIVE COMPLETE NAMEPLATE DATA, ITEM NUMBER AND DESCRIPTION.

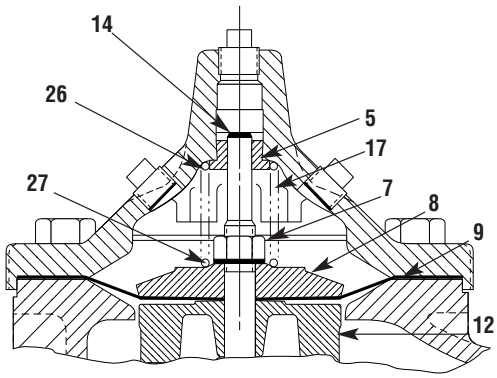

3" — 6" COVER DETAIL

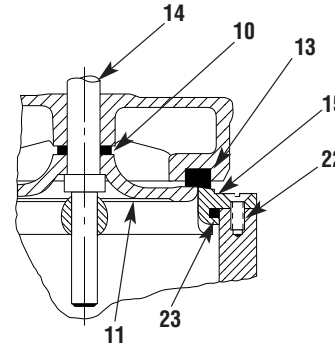

10" — 24" SEAT DETAIL

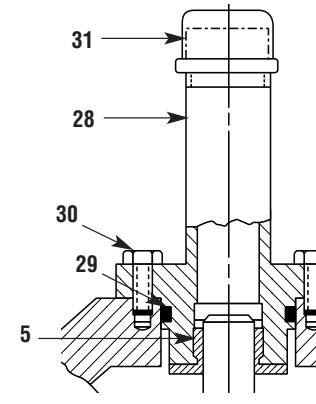

20" — 24" COVER DETAIL

©Copyright Cla-Val 2011 Printed in USA Specifications subject to change without notice.

INSTALLATION AND MAINTENANCE INSTRUCTIONS

3-WAY SOLENOID VALVES, NORMALLY OPEN NORMALLY CLOSED AND UNIVERSAL CONSTRUCTION

BULLETIN 8320

ASCO FORM NO. V5291R2

DESCRIPTION

Bulletin 8320 is a small 3-way solenoid operated valve with all three pipe connections located in the body. The bodies are of brass or stainless steel construction. Standard valves have General Purpose, Nema Type 1 Solenoid Enclosures. Valves that are equipped with a solenoid enclosure which is designed to meet Nema Type 4-Water tight, Nema Type 7 (C or D) Hazardous Locations - Class I, Group C or D, and Nema Type 9 (E, F or G) Hazardous Locations - Class II, Group E, F or G are shown on separate sheets of Installation and Maintenance Instructions, Form Numbers V-5391 and V-5381.

MANUAL OPERATORS (OPTIONAL)

Valves with suffix "MO" or "MS" in catalog number are provided with a Manual Operator which allows manual operation when desired or during an interruption of electrical power.

OPERATION

Normally Closed: Applies pressure when solenoid is energized: exhausts pressure when solenoid is de-energized

Normally Open: Applies pressure when solenoid is de-energized; exhausts pressure when solenoid is energized.

Universal: For normally closed or normally open operation, selection or diversion of pressure can be applied at port 1 (A), 2 (B), or 3 (C).

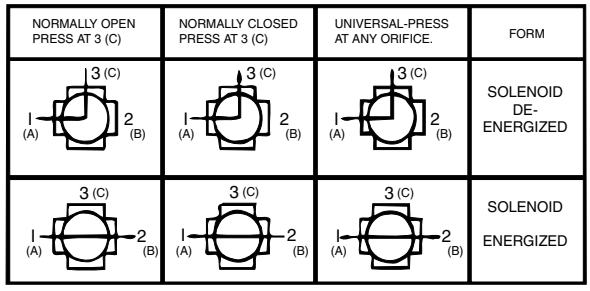

NOTE: Port Markings 1, 2, and 3 correspond directly to A, B and C.

INSTALLATION

Check Nameplate for correct Catalog Number, pressure, voltage and service.

POSITIONING

Valve may be mounted in any position

PIPING

Connect piping to valve according to markings on valve body. Refer to Flow Diagram provided. Apply pipe compound sparingly to male pipe threads only; if applied to valve threads, it may enter valve and cause operational difficulty. Pipe strain should be avoided by proper support and alignment of piping. When tightening pipe, do not use valve as lever.

IMPORTANT: For protection of the solenoid valve, install a strainer or filter suitable for the service involved in the inlet side as close to the valve as possible. Periodic cleaning is required depending on the service conditions.

WIRING

Wiring must comply with local and National Electrical Codes. For valves equipped with an explosion-proof, watertight solenoid enclosure, the electrical fittings must be approved for use in the approved hazardous locations. Housings for all solenoids are made with connections for 1/2 inch conduit. The general purpose enclosure may be rotated to facilitate wiring by removing the retaining cap.

NOTE

Alternating Current (A-C) and Direct Current (D-C) solenoids are built differently. To convert from one to other, it is necessary to change the complete solenoid, including the core assembly.

SOLENOID TEMPERATURE

Standard catalog valves are supplied with coils designed for continuous duty service. When the solenoid is energized for a long period, the solenoid enclosure becomes hot and can be touched with the bare hand for only an instant. This safe operating temperature. Any excessive heating will be indicated by the smoke and odor of burning coil insulation.

MAINTENANCE

WARNING: Turn off electrical power and line pressure to valve before making repairs. It is not necessary to remove valve from pipe line for repairs.

CLEANING

A periodic cleaning of all valves is desirable. The time between cleanings will vary, depending on the media and service conditions. In general, if the voltage to the coils is correct, sluggish valve operation or excessive leakage will indicate that cleaning is required.

IMPROPER OPERATION

1. **Faulty Control Circuit:** Check the electrical system by energizing the solenoid. A metallic click signifies the solenoid is operating. Absence of the click indicate loss of power supply. Check for loose or blown-out fuses, open-circuited or grounded coil, broken lead wires or splice.
2. **Burned-out Coil:** Check for open-circuited coil. Replace coil, if necessary.
3. **Low Voltage:** Check voltage across coil leads. Voltage must be at least 85% of nameplate ratings.
4. **Incorrect Pressure:** Check valve pressure. Pressure to valve must be within the range specified on nameplate.
5. **Excessive Leakage:** Disassemble valve and clean all parts. Replace parts that are worn or damaged with a complete Spare Parts Kit for best results.

COIL REPLACEMENT (REF. FIG. 2)

Turn off electrical power, disconnect coil lead wires and proceed as follows:

1. Remove retaining cap, nameplate and cover.
2. Slip yoke containing coil, sleeves and insulating washers off the solenoid base sub-assembly. Insulating washers are omitted when molded coil is used. In some D.C. Constructions, a single flux plate over the coil replaces yoke, sleeves and insulating washers.
3. Reassemble in reverse order of disassembly.

VALVE DISASSEMBLY AND REASSEMBLY (REF. FIG. 2)

Turn off electrical power supply and de-pressurize valve.

1. Remove retaining cap and slip entire solenoid off solenoid base subassembly or plugnut/core tube sub-assembly.
2. Unscrew bonnet or solenoid base sub-assembly. Remove core assembly, core spring and body gasket.
3. Remove end cap, body gasket, disc spring, disc holder, disc or disc holder assembly.
4. All parts are now accessible for cleaning or replacement. Replace worn or damaged parts with a complete Spare Parts Kit for best results.
5. Reassemble in reverse order of disassembly paying careful attention to exploded view provided.

ORDERING INFORMATION FOR SPARE PARTS KITS

When Ordering Spare Parts Kits or Coils Specify Valve Catalog Number, Serial Number and Voltage

Spare Parts Kits and Coils are available for ASCO valves. Parts marked with

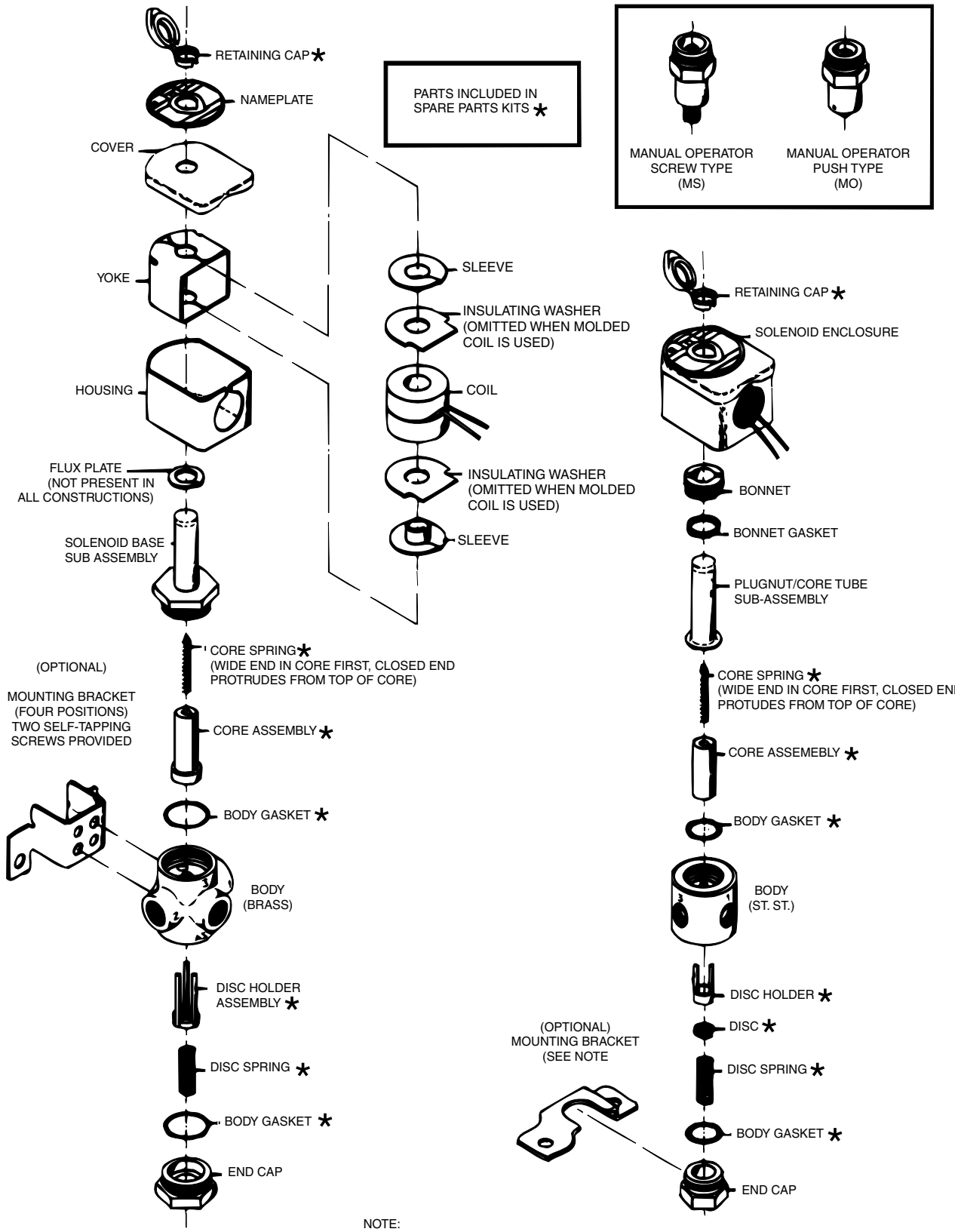

NOTE:
1. FOR MOUNTING, A FLAT SURFACE MUST BE PROVIDED ACROSS THE ENTIRE LENGTH OF THE BRACKET. THE VALVE BODY BECOMES SECURE TO BRACKET, WHEN BRACKET IS TIGHTENED IN TO POSITION. IF THE VALVE HAS A MANUAL OPERATOR, A HOLE MUST BE MADE THROUGH THE MOUNTING SURFACE FOR THE OPERATOR STEM.

CLA-VAL P.O. Box 1325 • Newport Beach, CA 92659-0325 • Phone: 949-722-4800 • Fax: 949-548-5441 • E-mail: claval@cla-val.com • Website cla-val.com
©Copyright Cla-Val 2011 Printed in USA Specifications subject to change without notice.

INSTALLATION AND MAINTENANCE INSTRUCTIONS

OPEN-FLAME, GENERAL PURPOSE, WATERTIGHT/EXPLOSIONPROOF SOLENOIDS

BULLETIN 8016G

ASCO FORM NO. V6583R5

-SERVICE NOTICE-

ASCO® solenoid valves with design change letter "G" in the catalog number (example: 8210G 1) have an epoxy encapsulated ASCO® Red Hat II. solenoid. This solenoid replaces some of the solenoids with metal enclosures and open-frame constructions. Follow these installation and maintenance instructions if your valve or operator uses this solenoid.

DESCRIPTION

Catalog numbers 8016G1 and 8016G2 are epoxy encapsulated pull-type solenoids. The green solenoid with lead wires and 1/2 " conduit connection is designed to meet Enclosure Type 1 -General Purpose,Type 2-Dripproof,Types 3 and 3S-Raintight, and Types 4 and 4X-Watertight. The black solenoid on catalog numbers prefixed "EF" is designed to meet Enclosure Types 3 and 3S-Raintight, Types 4 and 4X-Watertight, Types 6 and 6P-Submersible, type 7 (A, B, C, & D) Explosionproof Class 1, Division 1, Groups A, B, C, & D and Type 9 (E, F, & G)-Dust-Ignitionproof Class 11, Division 1, Groups E, F, & G. The Class 11, Groups F & G Dust Locations designation is not applicable for solenoids or solenoid valves used for steam service or when a class "H" solenoid is used. See Temperature Limitations section for solenoid identification and nameplate/retainer for service. When installed just as a solenoid and not attached to an ASCO valve, the core has a 0.250-28 UNF-2B tapped hole, 0.38 minimum full thread.

Series 8016G solenoids are available in:

- **Open-Frame Construction**
  The green solenoid may be supplied with 1/4 spade, screw, or DIN terminals (Refer to Figure 4).
- **Panel Mounted Construction**
  These solenoids are specifically designed to be panel mounted by the customer through a panel having a .062 to .093 maximum wall thickness. (Refer to Figure 3 and section on Installation of Panel Mounted Solenoid).

Optional Features For Type 1—General Purpose Construction Only

- **Junction Box**
  This junction box construction meets Enclosure Types 2,3,3S,4, and 4X. Only solenoids with 1/4" spade or screw terminals may have a junction box. The junction box provides a 1/2 conduit connection, grounding and spade or screw terminal Connections within the junction box (See Figure 5).

- **DIN Plug Connector Kit No. K236 - 034**
  Use this kit only for solenoids with DIN terminals. The DIN plug connector kit provides a two pole with grounding contact DIN Type 43650 construction (See Figure 6).

OPERATION

When the solenoid is energized, the core is drawn into the solenoid base sub-assembly. **IMPORTANT:** When the solenoid is de-energized, the initial return force for the core, Whether developed by spring, pressure, or weight, must exert a minimum force to overcome residual magnetism created by the solenoid. Minimum return force for AC construction is 11 ounces, and 4 ounces for DC construction.

INSTALLATION

Check nameplate for correct catalog number, service, and wattage. Check front of solenoid for voltage and frequency.

WARNING: To prevent the possibility of electrical shock from the accessibility of live parts, install the open-frame solenoid in an enclosure.

FOR BLACK ENCLOSURE TYPES 7 AND 9 ONLY

CAUTION: To prevent fire or explosion, do not install solenoid and/or valve where ignition temperature is less than 165˚ C. On valves used for steam service or when a class "H" solenoid is used, do not install in hazardous atmosphere where ignition temperature is less than 180˚ C. See nameplate/retainer for service. **NOTE:** These solenoids have an internal non-resetable thermal fuse to limit solenoid temperature in the event that extraordinary conditions occur which could cause excessive temperatures. These conditions include high input voltage, a jammed core, excessive ambient temperature or shorted solenoid, etc. This unique feature is a standard feature is a standard feature only in solenoids with black explosionproof/dust-ignitionproof enclosures (types 7&9).

IMPORTANT: To protect the solenoid valve or operator, install a strainer or filter, suitable for the service involved in the inlet side as close to the valve or operator as possible. Clean periodically depending on service condition & See ASCO Series 8600, 8601, and 8602 for strainers.

Temperature Limitations

For maximum valve ambient temperatures, refer to chart. The temperature limitations listed, only indicate maximum application temperatures for field wiring rated at 90°C. Check catalog number prefix and watt rating on nameplate to determine maximum ambient temperature. See valve installation and maintenance instructions for maximum fluid temperature. **NOTE:** For steam service, refer to Wiring section, Junction Box for temperature rating of supply wires.

Temperature Limitations For Series 8016G Solenoids for use Valves Rated at 6.1, 8.1,9.1,10.6 or 11.1 Watts

Watts Rating	Catalog Number Coil prefix	Class of Insulation	Maximum ambient Temp. ˚F
6.1, 8.1, 9.1, & 11.1	None, FB, KF, KP, SF, SP, SC, & SD	F	125
6.1, 8.1, 9.1, & 11.1	HB, HT, KB, KH, SS, ST, SU, & ST	H	140
10.6	None, KF, SF, & SC	F	104
10.6	HT, KH, SU, & ST	H	104

Minimum ambient temperature -40° F (-40° C). Positioning

Positioning

This solenoid is designed to perform properly when mounted in any position. However, for optimum life and performance, the solenoid should be mounted vertically and upright to reduce the possibility of foreign matter accumulating in the solenoid base sub-assembly area.

Wiring

Wiring must comply with local codes and the National Electrical Code. All solenoids supplied with lead wires are provided with a grounding wire which is green or green with yellow stripes and a 1/2" conduit connection. To facilitate wiring, the solenoid may be rotated 360˚. For the watertight and explosionproof solenoid, electrical fittings must be approved for use in the approved hazardous locations.

Additional Wiring Instructions For Optional Features:

• Open-Frame solenoid with 1/4" spade terminals

For solenoids supplied with screw terminal connections use #12-18 AWG stranded copper wire rated at 90°C or greater. Torque terminal block screws to 10 ± 2 in-lbs (1,0 + 1,2 Nm). A tapped hole is provided in the solenoid for grounding, use a #Y10-32 machine screw. Torque grounding screw to 15 -20

in-lbs (1,7 - 2,3 Nm). On solenoids with screw terminals, the socket head screw holding the terminal block to the solenoid is the grounding screw. Torque the screw to 15 - 20 in-lbs (1,7 - 2,3 Nm). with a 5/32" hex key wrench.

- **Junction Box**
  The junction box is used with spade or screw terminal solenoids only and is provided with a grounding screw and a 1/2" conduit connection. Connect #12-18AWG standard copper wire only to the screw terminals. Within the junction box use field wire that is rated 90°C or greater for connections. For steam service use 105°C rated wire up to 50 psi or use 125°C rated wire above 50 psi. After electrical hookup, replace cover gasket, cover, and screws. Tighten screws evenly in a crisscross manner.

• DIN Plug Connector Kit No. KC236-034

1. The open—frame solenoid is provided with DIN terminals to accommodate the DIN plug connector kit.
2. Remove center screw from plug connector. Using a small screwdriver, pry terminal block from connector cover.
3. Use #12-18 AWG stranded copper wire rated at 90°C or greater for connections. Strip wire leads back approximately 1/4" for installation in socket terminals. The use of wire-end sleeves is also recommended for these socket terminals. Maximum length of wire-end sleeves to be approximately 1/4". Tinning of the ends of the lead wires is not recommended.
4. Thread wire through gland nut, gland gasket, washer, and connector cover.

NOTE: Connector cover may be rotated in 90° increments from position shown for alternate positioning of cable entry.

5. Check DIN connector terminal block for electrical markings. Then make electrical hookup to terminal block according to markings on it. Snap terminal block into connector cover and install center screw.
6. Position connector gasket on solenoid and install plug connector. Torque center screw to 5 ± 1 in-lbs (0,6 ± 1,1 Nm).

NOTE: Alternating current (AC) and direct current (DC) solenoids are built differently. To convert from one to the other, it may be necessary to change the complete solenoid including the core and solenoid base sub-assembly, not just the solenoid. Consult ASCO.

Installation of Solenoid

Solenoids may be assembled as a complete unit. Tightening is accomplished by means of a hex flange at the base of the solenoid. The 3/4" bonnet construction (Figure 1) must be disassembled for installation and installed with a special wrench adapter.

Installation of Panel Mounted Solenoid (See Figure 3)

Disassemble solenoid following instruction under Solenoid Replacement then proceed

3/4" Valve Bonnet Construction

1. Install retainer(convex side to solenoid) in 1.312 diameter mounting hole in customer panel.
2. Then position spring washer over plugnut/core tube sub-assembly.
3. Install plugnut/core tube sub-assembly through retainer in customer panel. Then replace solenoid, nameplate/retainer and red cap.

15/16" Valve Bonnet Construction

1. Install solenoid base sub-assembly through 0.69 diameter mounting hole in customer panel.
2. Position spring washer on opposite side of panel over solenoid base sub-assembly then replace.

Solenoid Temperature

Standard solenoids are designed for continuous duty service. When the solenoid is energized for a long period, the solenoid becomes hot and can be touched by hand only for an instant. This is a safe operating temperature.

MAINTENANCE

WARNING: To prevent the possibility of personal injury or property damage, turn off electrical power, depressurize solenoid operator and/or valve, and vent fluid to a safe area before servicing.

Cleaning

All solenoid operators and valves should be cleaned periodically. The time between cleaning will vary depending on medium and service conditions. In general, if the voltage to the solenoid is correct, sluggish valve operation, excessive noise or leakage will indicate that cleaning is required. Clean strainer or filter when cleaning the valve,

Preventive Maintenance

- Keep the medium flowing through the solenoid operator or valve as free from dirt and foreign material as possible.
- While in service, the solenoid operator or valve should be operated at least once a month to insure proper opening and closing.
- Depending on the medium and service conditions, periodic inspection of internal valve parts for damage or excessive wear is recommended. Thoroughly clean all parts. Replace any worn or damaged parts.

Causes of Improper Operation

- **Faulty Control Circuit:** Check the electrical system by energizing the solenoid. A metallic click signifies that the solenoid is operating. Absence of the click indicates loss of power supply. Check for loose or blown fuses, open-circuited or grounded solenoid, broken lead wires or splice connections.

- **Burned-Out Solenoid:** Check for open-circuited solenoid. Replace if necessary. Check supply voltage; it must be the same as specified on nameplate/retainer and marked on the solenoid. Check ambient temperature and check that the core is not jammed.
- **Low Voltage:** Check voltage across the solenoid leads. Voltage must be at least 85% of rated voltage.

Solenoid Replacement

1. On solenoids with lead wires disconnect conduit, coil leads, and grounding wire.

NOTE: Any optional parts attached to the old solenoid must be reinstalled on the new solenoid.

2. Disassemble solenoids with optional features as follows:

• Spade or Screw Terminals
Remove terminal connections, grounding screw, grounding wire, and terminal block (screw terminal type only).

NOTE: For screw terminals, the socket head screw holding the terminal block serves as a grounding screw.

- Junction Box
  Remove conduit and socket head screw (use 5132" hex key wrench) from center of junction box. Disconnect junction box from solenoid.

- **DIN Plug Connector**
  Remove center screw from DIN plug connector. Disconnect DIN plug connector from adapter. Remove socket head screw (use 5/32" hex key wrench), DIN terminal adapter, and gasket from solenoid.

3. Snap off red cap from top of solenoid base sub-assembly.
4. Push down on solenoid. Then using a suitable screwdriver, insert blade in slot provided between solenoid and nameplate/retainer. Pry up slightly and push to remove. Then remove solenoid from solenoid base sub-assembly.
5. Reassemble using exploded views for parts identification and placement

Disassembly and Reassembly of Solenoids

1. Remove solenoid, see Solenoid Replacement.
2. Remove finger washer or spring washer from solenoid base sub-assembly.
3. Unscrew solenoid base sub-assembly.

NOTE: Some solenoid constructions have a plugnut/core tube sub-assembly, bonnet gasket and bonnet in place of the solenoid base sub-assembly. To remove bonnet use special wrench adapter supplied in ASCO Rebuild Kit. For wrench adapter only, order ASCO Wrench Kit No.K218 - 948.

4. The core is now accessible for cleaning or replacement.
5. If the solenoid is part of a valve, refer to basic valve installation and maintenance instructions for further disassembly.
6. Reassemble using exploded views for identification and placement of parts.

ORDERING INFORMATION FOR ASCO SOLENOIDS

When Ordering Solenoids for ASCO Solenoid Operators or Valves, order the number stamped on the solenoid. Also specify voltage and frequency.

Torque Chart

Part Name	Torque Value in inch-Pounds	Torque Value in Newton-Meters
solenoid base sub-assembly	175 ± 25	19.8 ± 2.8
valve bonnet (3/4" bonnet constructions)	90 ± 10	10.2 ± 1.1
bonnet screw (3/8" or 1/2" NPT pipe size)	25	2.8
bonnet screw (3/4" NPT pipe size)	40	4.5

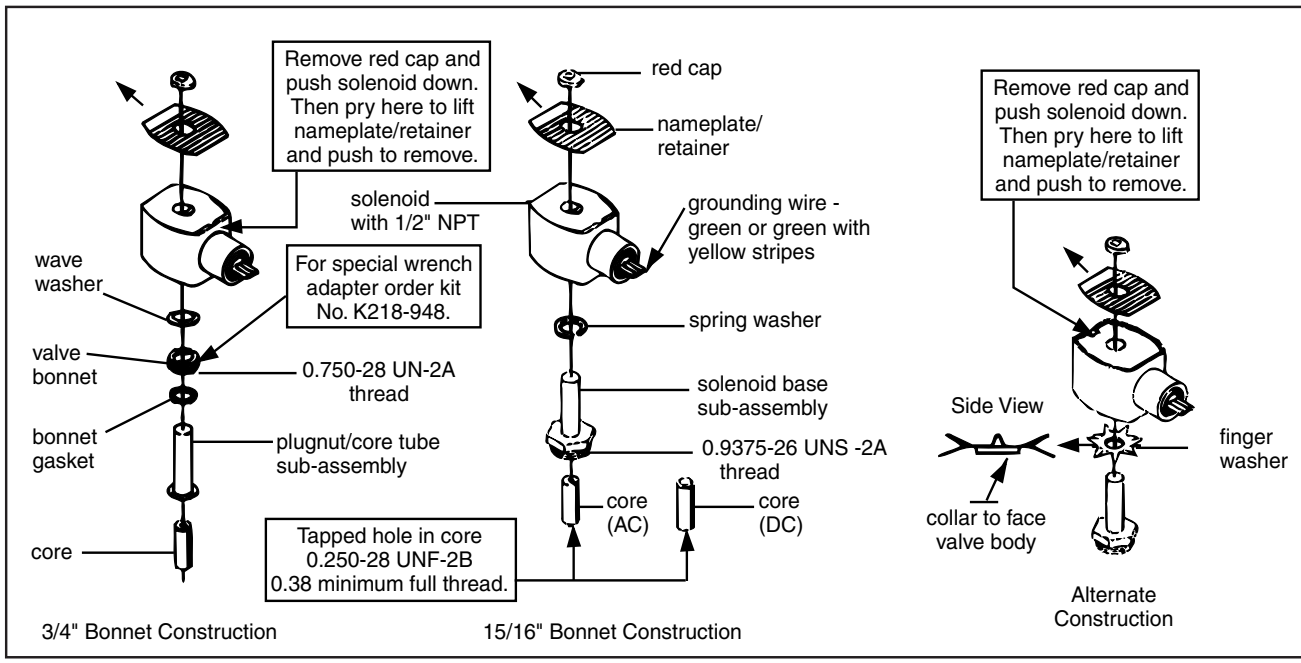

Figure 1. Series 8016G solenoids

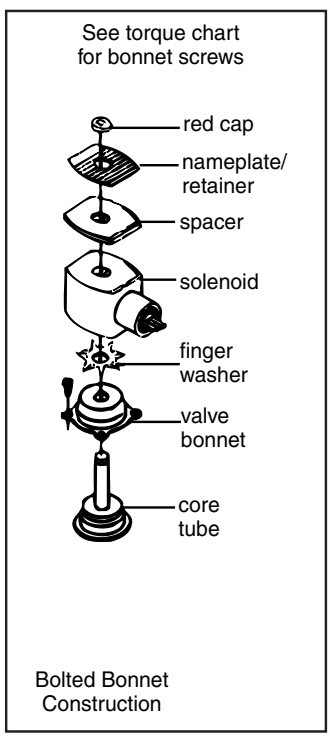

Figure 2. Series 8016G solenoid

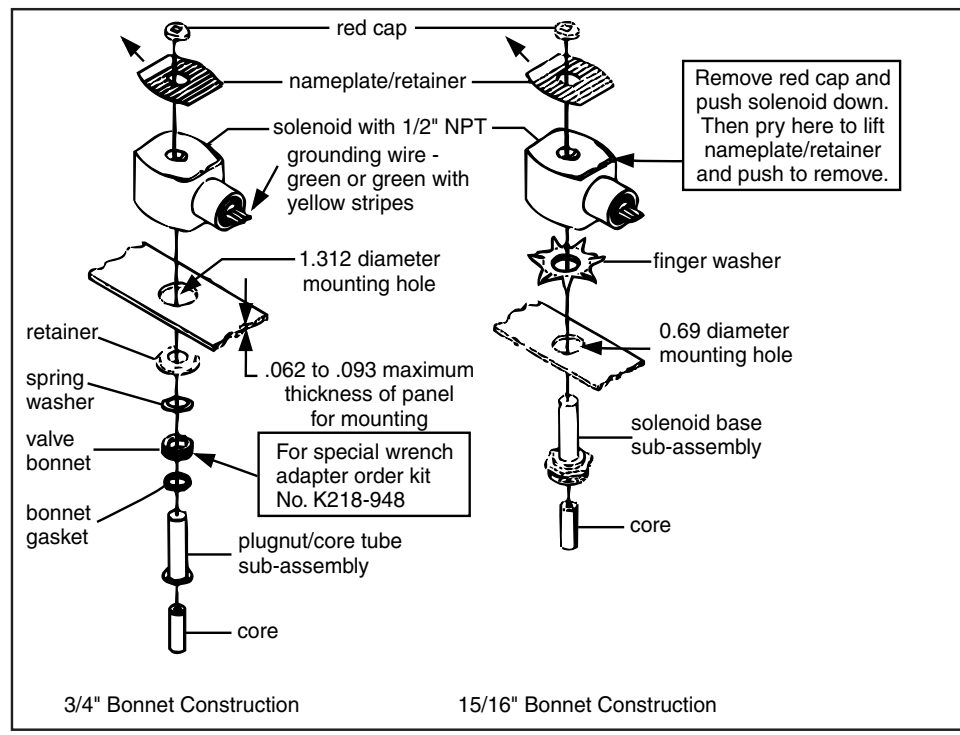

Figure 3. Series 8016G panel mounted solenoids

Torque Chart

Part Name	Torque Value in inch-Pounds	Torque Value in Newton-Meters
terminal block screws	10 ± 2	1,1 ± 0,2
socket head screw	15 - 20	1,7 - 2,3
center screw	5 ± 1	0,6 ± 0,1

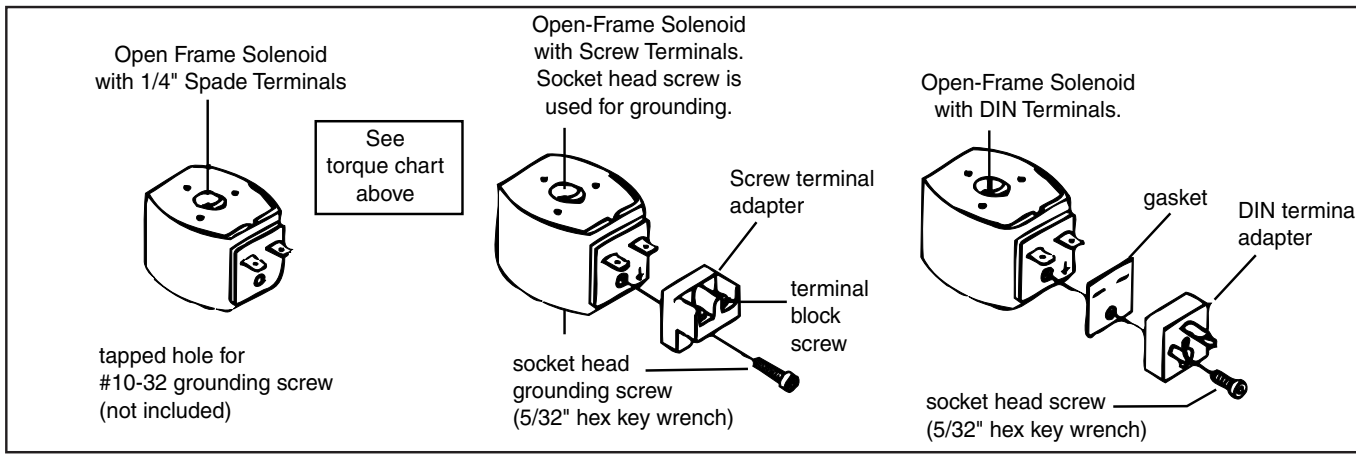

Figure 4. Open - frame solenoids

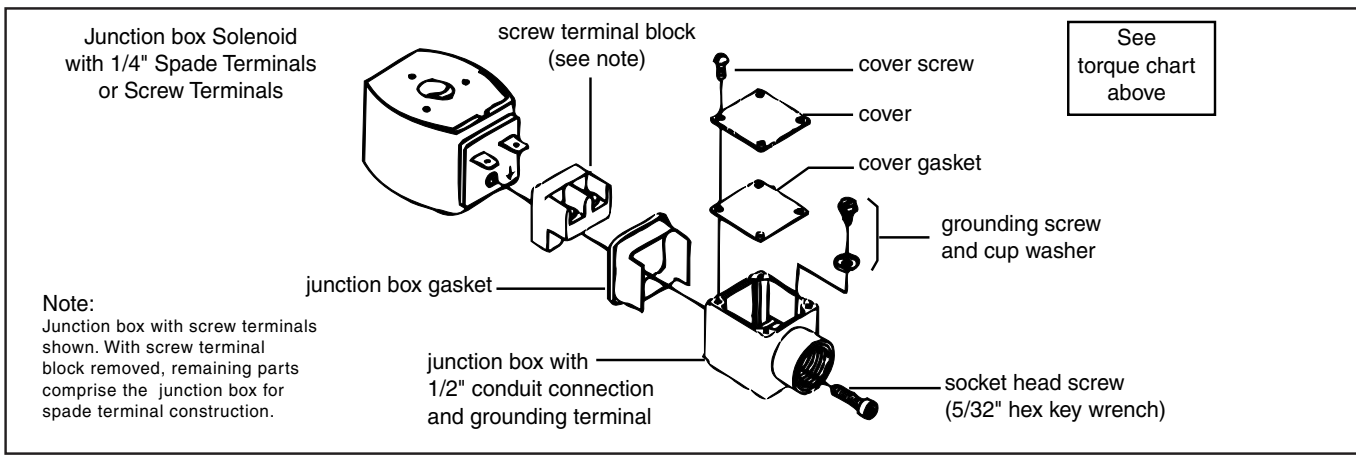

Figure 5. Open - frame solenoids

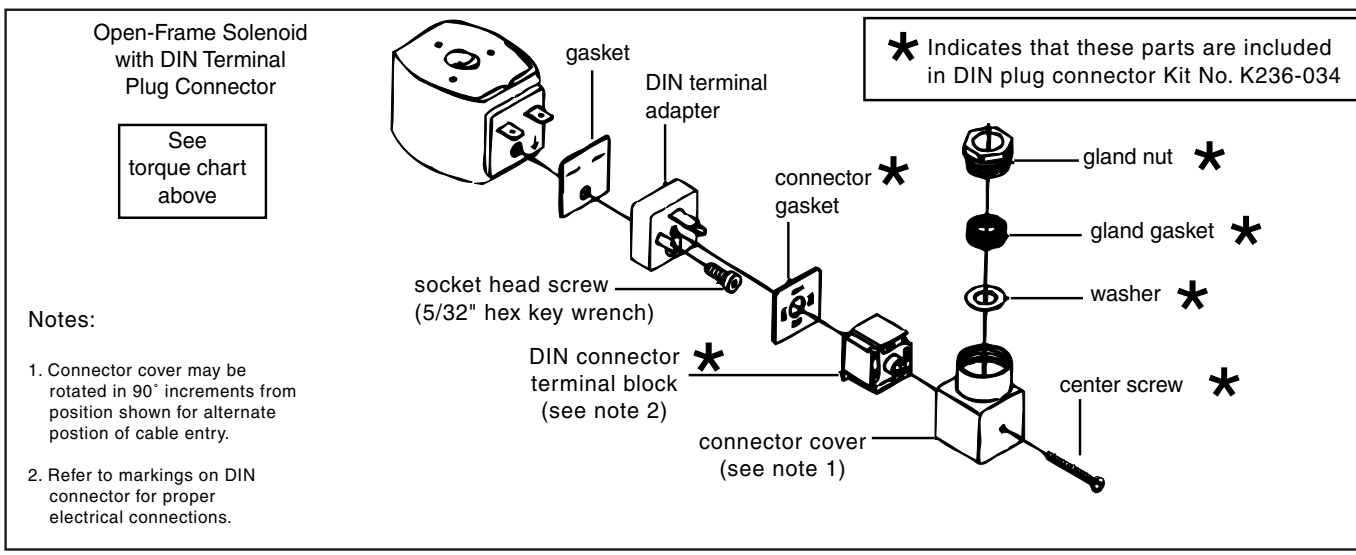

©Copyright Cla-Val 2011 Printed in USA Specifications subject to change without notice.

THIS DRAWING IS THE PROPERTY OF CLA-VAL CO AND SAME AND COPIES MADE THEREOF, IF ANY, SHALL BE RETURNED TO CLA-VAL CO UPON REQUEST. IT IS LOANED SUBJECT TO THE AGREEMENT AND UNDERSTANDING UPON CONDITION THAT THE SAME SHALL NOT BE USED, COPIED OR REPRODUCED NOR SHALL THE SUBJECT MATTER BE DISCLOSED IN ANY MANNER TO ANYONE EXCEPT THOSE AUTHORIZED BY CLA-VAL CO WITHOUT THE PRIOR WRITTEN APPROVAL OF CLA-VAL CO. THIS DRAWING IS SUBMITTED CONFIDENTIALLY AND MAY NOT BE USED IN THE MANUFACTURE OF ANY EQUIPMENT OR FOR ANY OTHER PURPOSE EXCEPT AS SPECIFICALLY FURNISHED TO CLA-VAL CO. WHETHER OR NOT THE EQUIPMENT OR INFORMATION SHOWN HEREON IS PATENTED OR OTHERWISE PROTECTED, NO RIGHTS ARE GRANTED IN ANY PATENT OR DRAWING AND/OR INFORMATION DERIVED OR SUBMITTED ARE FULLY RESERVED BY CLA-VAL CO.

204668 | 1 | C

REVISIONS			
REV	DESCRIPTION	DATE	APPROVED
-	RELEASED FOR PRODUCTION (NED 49307)	12-20-04	I.C.
A	REDESIGN BODY WITH INSERT TYPE, ADDED ITEM 20 (INSERT), ITEM 21(O-RING) & ITEM 22 (O-RING). (ECO 20155)	4-12-05	I.C.
B	UPDATED BODY SHAPE IN ALL VIEWS (ECO 20240)	10-25-05	EK
C	CAT. NO WAS 102E (ECO 20568)	5-06-08	EK

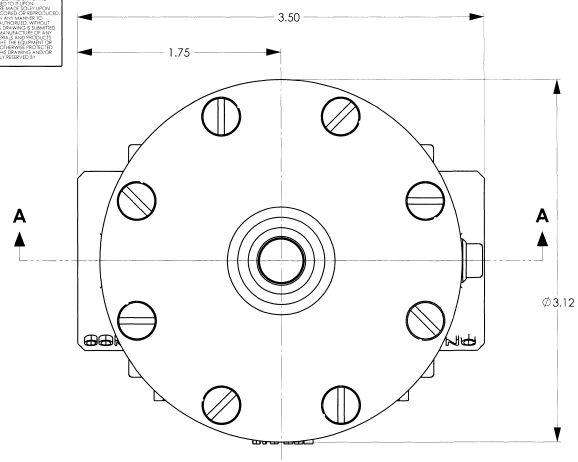

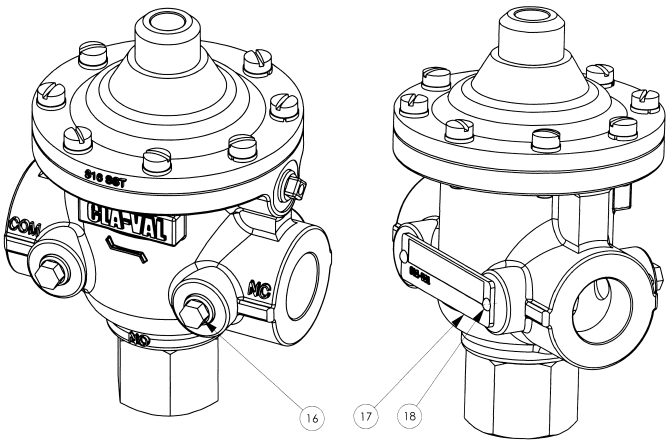

BASIC VALVE	
CLA-VAL CATALOG NUMBER	DESCRIPTION
102C - 2	SPRING UNDER DIAPHRAGM BOTH ACTUATING CONNECTIONS OPEN
102C - 3	SPRING OVER DIAPHRAGM BOTH ACTUATING CONNECTIONS OPEN

OPTIONAL FEATURE	
SUFFIX NUMBER	DESCRIPTION
A	ORIFICE IN BRIDGEWALL
B	ORIFICE IN LOWER SEAT
G	VENT PLUG IN SENSING CHAMBER ACTUATING CONNECTION
H	PIPE PLUG IN SENSING CHAMBER ACTUATING CONNECTION

CATALOG NUMBER EXAMPLE:

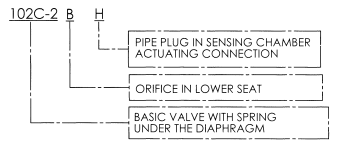

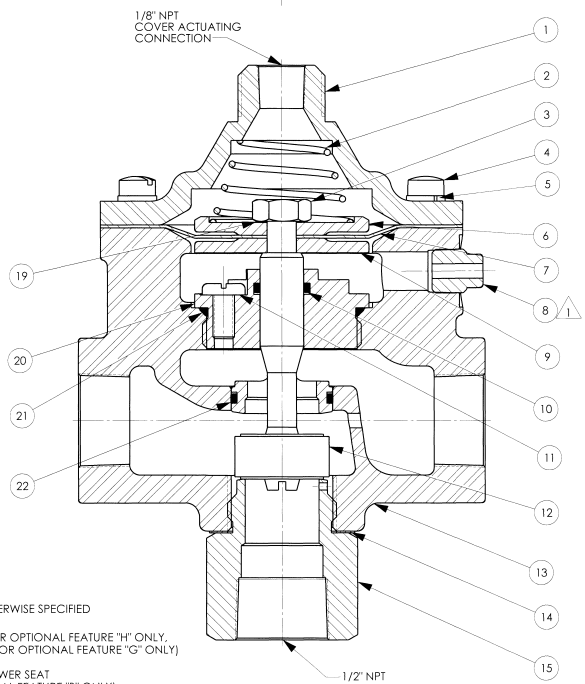

NOTES: UNLESS OTHERWISE SPECIFIED

1. PIPE PLUG (FOR OPTIONAL FEATURE "H" ONLY, VENT PLUG (FOR OPTIONAL FEATURE "G" ONLY)
2. ORIFICE IN LOWER SEAT (FOR OPTIONAL FEATURE "B" ONLY)
3. ORIFICE IN BRIDGEWALL (FOR OPTIONAL FEATURE "A" ONLY)

SECTION A-A 102C-3 SERIES (WITH SPRING OVER DIAPHRAGM) 1/2" NPT SCREWED ENDS SHOWN

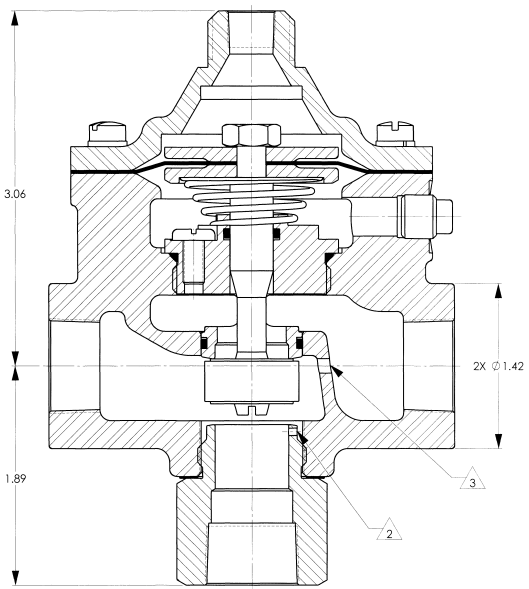

SECTION A-A 102C-2 SERIES (WITH SPRING UNDER DIAPHRAGM) 1/2" NPT SCREWED ENDS SHOWN

ITEM NO.	QTY.	DESCRIPTION
22	1	O-RING
21	1	O-RING
20	1	UPPER SEAT
19	1	WASHER, NYLON .263 X .432 X .010
18	2	DRIVE SCREW
17	1	NAMEPLATE
16	2	1/8 NPT HEX HD PLUG
15	1	LOWER SEAT, 102C 3WAY VALVE
14	1	GASKET
13	1	BODY, 102C 3-WAY VALVE
12	1	STEM ASSEMBLY
11	1	SEALING SCREW (OMIT WITH FEATURE H)
10	1	O-RING (OMIT WITH FEATURE H)
9	1	DIAPHRAGM WASHER
8	1	PLUG, VENTED/ 1/8NPT PLUG
7	1	DIAPHRAGM
6	1	DIAPHRAGM WASHER, SPRING RETAINING
5	8	LOCK WASHER
4	8	SCREW, FIL HD 10-32 X .62"LG
3	1	BOLT, 1/4-20 UNC-2A X 5/8" LG
2	1	CONICAL SPRING, 102C 3WAY VALVE
1	1	COVER, 102C 3-WAY VALVE

PARTS LIST

UNLESS OTHERWISE SPECIFIED DIMENSIONS ARE IN INCHES & TOLERANCES ARE: FRACTIONS ± | DECIMALS ± | ANGLES ±

-DO NOT SCALE DRAWING-

CONTRACT NO.

APPROVALS		DATE
DRAWN	I.C.	12-06-04
CHECKED	VL	5-02-05
APPROVED	EK	5-02-05
ENGR		

CLA-VAL CO. NEWPORT BEACH, CALIFORNIA

TITLE: 102C SERIES 3-WAY VALVE ASSEMBLY SCREWED ENDS

SIZE: D | CAGE CODE: 86184 | DWG. NO.: 204668 | REV: C

SCALE: NONE | UNITS/PC: ---- | SHEET 1 OF 1

DIST. CODE 007A

5/12/2008

CLA-VAL

CN

Globe and Angle Needle Valves—CN Series

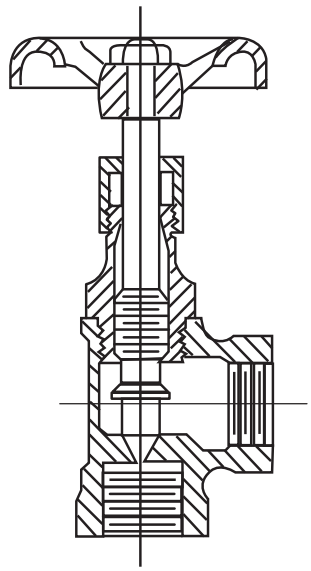

CAT. NO. CNA
ANGLE

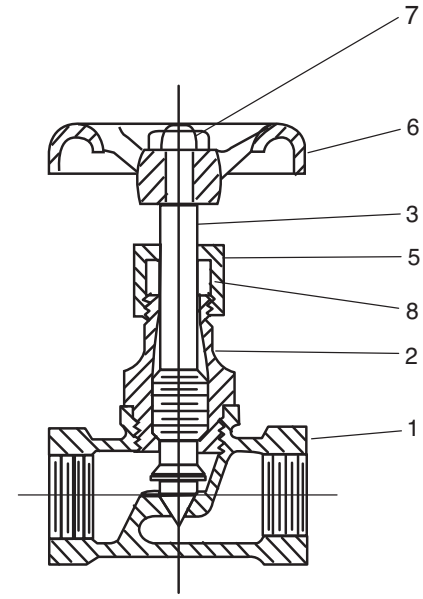

CAT. NO. CNB
GLOBE

WHEN USED AS A CONTROL VALVE, HANDWEEL IS REMOVED AND STEM IS SLOTTED FOR SCREW-DRIVER ADJUSTMENT.

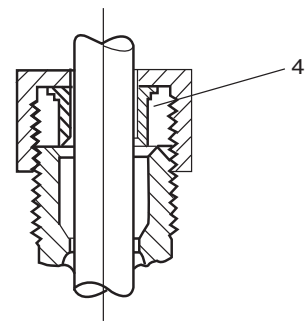

3/4" SIZE ONLY

When ordering parts, please specify:

- All nameplate data
- Description
- Part Number
- Item Number
- Material

Item	Description
1.	Body
2.	Bonnet
3.	Stem
4.	Gland
5.	Nut
6.	Handwheel
7.	Nut
8.	Packing

©Copyright Cla-Val 2011 Printed in USA Specifications subject to change without notice.

CLA-VAL™

— MODEL — X46

Flow Clean Strainer

X46A Straight

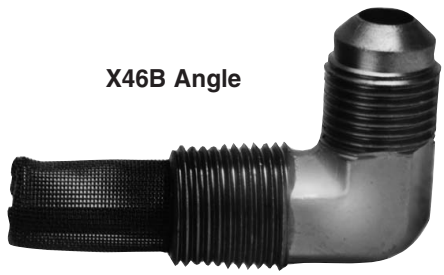

X46B Angle

- **Self Scrubbing Cleaning Action**
- **Straight Type or Angle Type**

The Cla-Val Model X46 Strainer is designed to prevent passage of foreign particles larger than .015". It is especially effective against such contaminant as algae, mud, scale, wood pulp, moss, and root fibers. There is a model for every Cla-Val. valve.

The X46 Flow Clean strainer operates on a velocity principle utilizing the circular "air foil" section to make it self cleaning. Impingement of particles is on the "leading edge" only. The low pressure area on the downstream side of the screen prevents foreign particles from clogging the screen. There is also a scouring action, due to eddy currents, which keeps most of the screen area clean.

Dimensions (In Inches)

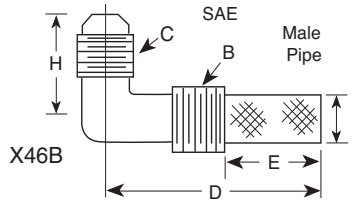

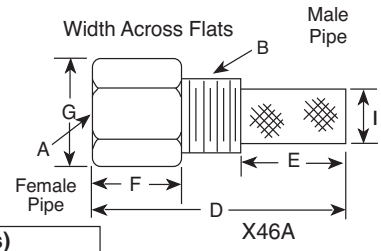

X46 Angle Type B (In Inches)

B(NPT)	C(SAE)	D	E	H	I
1/8	1/4	1-3/8	5/8	7/8	1/4
1/4	1/4	1-3/4	3/4	1	3/8
3/8	1/4	2	7/8	1	1/2
3/8	3/8	1-7/8	7/8	1	1/2
1/2	3/8	2-3/8	1	1-1/4	5/8

X46A Straight Type A (In Inches)

A (NPT)	B (NPT)	D	E	F	G	I
1/8	1/8	1-3/4	3/4	1/2	1/2	1/4
1/4	1/4	2-1/4	1	3/4	3/4	3/8
3/8	3/8	2-1/2	1	7/8	7/8	1/2
3/8	1/2	2-1/2	1-1/4	1/2	7/8	3/4
1/2	1/2	3	1-1/4	1	1-1/8	3/4
3/8	3/4	3-3/8	2	1/2	1	7/8
3/4	3/4	4	2	1	1-1/2	7/8
3/8	1	4-1/4	2-3/4	1/2	1-3/8	7/8
1	1	4-1/2	2-3/4	1-1/4	1-3/4	7/8
1/2	1	4-1/4	2-3/4	1/2	1-3/8	7/8

When Ordering, Please Specify:

- Catalog Number X46
- Straight Type or Angle Type
- Size Inserted Into and Size Connection
- Materials

INSTALLATION

The strainer is designed for use in conjunction with a Cla-Val Main Valve, but can be installed in any piping system where there is a moving fluid stream to keep it clean. When it is used with the Cla-Val Valve, it is threaded into the upstream body port provided for it on the side of the valve. It projects through the side of the Main Valve into the flow stream. All liquid shunted to the pilot control system and to the cover chamber of the Main Valve passes through the X46 Flow Clean Strainer.

INSPECTION

Inspect internal and external threads for damage or evidence of cross-threading. Check inner and outer screens for clogging, embedded foreign particles, breaks, cracks, corrosion, fatigue, and other signs of damage.

DISASSEMBLY

Do not attempt to remove the screens from the strainer housing.

CLEANING

After inspection, cleaning of the X46 can begin. Water service usually will produce mineral or lime deposits on metal parts in contact with water. These deposits can be cleaned by dipping X46 in a 5-percent muriatic acid solution just long enough for deposit to dissolve. This will remove most of the common types of deposits. **Caution: use extreme care when handling acid.** If the deposit is not removed by acid, then a fine grit (400) wet or dry sandpaper can be used with water. Rinse parts in water before handling. An appropriate solvent can clean parts used in fueling service. Dry with compressed air or a clean, lint-free cloth. Protect from damage and dust until reassembled.

REPLACEMENT

If there is any sign of damage, or if there is the slightest doubt that the Model X46 Flow Clean Strainer may not afford completely satisfactory operation, replace it. Use Inspection steps as a guide. Neither inner screen, outer screen, nor housing is furnished as a replacement part. Replace Model X46 Flow Clean Strainer as a complete unit.

When ordering replacement Flow-Clean Strainers, it is important to determine pipe size of the tapped hole into which the strainer will be inserted (refer to column A or F), and the size of the external connection (refer to column B or G).

CLA-VAL P.O. Box 1325 • Newport Beach, CA 92659-0325 • Phone: 949-722-4800 • Fax: 949-548-5441 • E-mail: claval@cla-val.com • Website cla-val.com
©Copyright Cla-Val 2011 Printed in USA Specifications subject to change without notice.

BB	ADDED PN'S 67783-62B (NED 62200)	AK 07-10-08
BC	ADDED PN'S 67783-63K (NED 62218)	AK 08-14-08
BD	ADDED PN 67783-64H (NED 62446)	PC 10-1-2008

CAD REVISION RECORD - DO NOT REVISE MANUALLY

LTR	DESCRIPTION	BY	DATE
A-AY	SEE REVISION FILE		
BA	ADDED PN'S 67783-59H, 67783-60F & 67783-61D (ECO 20434)	AK	03-14-06

CLA-VAL CO. NEWPORT BEACH, CALIFORNIA

CATALOG NO.

DRAWING NO. 67783 REV BD

TYPE OF VALVE AND MAIN FEATURES

CK2 COCK/BALL VALVE

DESIGN		
DRAWN	MGR	4-02-80
CHK'D	KD	4-03-80
APV'D	CH	4-07-80

SCALE: NONE

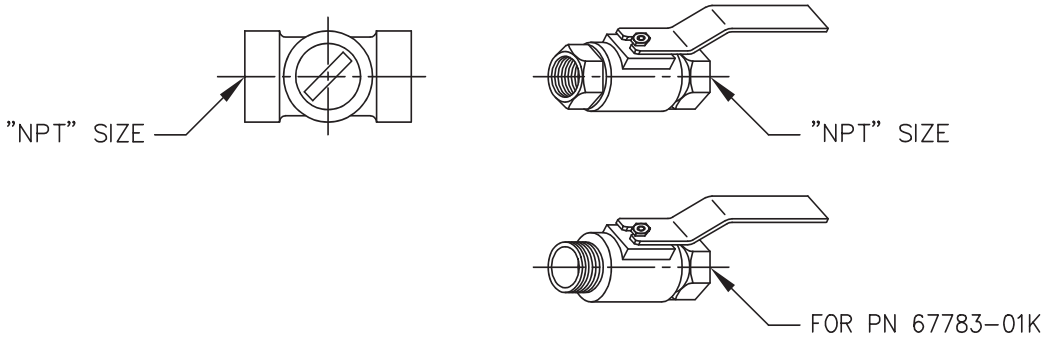

CLA-VAL PART NO. AND MATERIAL

BRONZE WITH HANDLE	STEEL WITH HANDLE	IRON WITH HANDLE	316 SST WITH HANDLE	316 SST W/ LOCKING HANDLE	BRONZE WITH HANDLE	MONEL WITH HANDLE	MONEL W/ LOCKING HANDLE	SIZE "NPT"
67783-01K*	-09C	-17F	-25J SUPSD BY-26G		-41F SUPSD BY-01K			1/8"
-02H	-10A	-18D	-26G	-51E SUPSD BY-26G -52C	-42D SUPSD BY-02H	-55F		1/4"
-03F* -59H***	-11J	-19B	-27E	-46E SUPSD BY-27E -53A	-45G -57B**	-48A SUPSD BY-49J	-63K	3/8"
-04D -60F ***	-12G	-20K	-28C	-54J	-43B SUPSD BY-04D	-49J	-62B	1/2"
-05A -61D ***	-13E	-21H	-29A	-64H	-44K SUPSD BY-05A	-56D		3/4"
-06J	-14C	-22F	-30J			-58K		1"
-07G	-15K	-23D	-31G					1 1/4"
-08E	-16H	-24B	-32E					1 1/2"
-50G			-47C					2"

* SEE ENGINEERING APPROVED VENDORS TABLE (SHEET 2 OF 2).

** HAMMOND VALVE 8501 ONLY.

*** WILKINS CK2 (SEE SHEET 2 OF 2)

"THIS DRAWING IS THE PROPERTY OF CLA-VAL CO. AND SAME AND COPIES MADE THEREOF, IF ANY, SHALL BE RETURNED TO IT UPON DEMAND. DELIVERY AND DISCLOSURE HEREOF ARE SOLELY UPON CONDITION THAT THE SAME SHALL NOT BE USED, COPIED OR REPRODUCED, NOR SHALL THE SUBJECT HEREOF BE DISCLOSED IN ANY MANNER TO ANYONE FOR ANY PURPOSE, EXCEPT AS HEREIN AUTHORIZED, WITHOUT PRIOR WRITTEN APPROVAL OF CLA-VAL CO. THIS DRAWING IS SUBMITTED CONFIDENTIALLY AND MAY NOT BE USED IN THE MANUFACTURE OF ANY MATERIAL OR PRODUCT OTHER THAN SUCH MATERIALS AND PRODUCTS FURNISHED TO CLA-VAL CO. WHETHER OR NOT THE EQUIPMENT OR INFORMATION SHOWN HEREON IS PATENTED OR OTHERWISE PROTECTED, FULL TITLE AND COPYRIGHTS, IF ANY, IN AND TO THIS DRAWING AND/OR INFORMATION DELIVERED OR SUBMITTED ARE FULLY RESERVED CLA-VAL CO."

©Copyright Cla-Val 2011 Printed in USA Specifications subject to change without notice.

CLA-VAL™

— MODEL — **X141**

Cla-Val Gauge Option

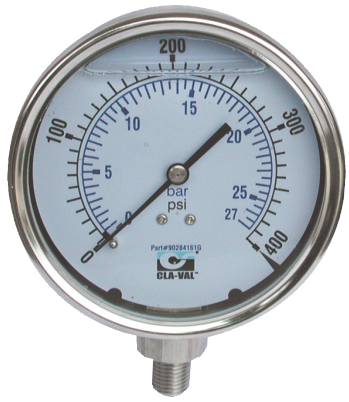

Model X141
4" Pressure Gauge

- **Liquid-Filled**
- **Dual Scale (PSI / BAR)**
- **Long Life Stainless Steel Construction**
- **Tamper-Resistant Design**
- **2 ½" and 4" Diameter Sizes**
- **Isolation Valve Included**

The Cla-Val Model X141 Pressure Gauge Option consists of glycerin-filled pressure gauges with the Cla-Val Logo and ¼" CK2 Bronze Isolation Valves on the main valve inlet and outlet. Cla-Val gauges are waterproof, shock resistant, and fully enclosed with a stainless steel case and bronze wetted parts. Ambient temperature ratings are -4 Degrees F to +140 Degrees F (-20 Degrees C to +60 Degrees C).

All gauges have dual scale (PSI/BAR) and are supplied with a 1/4" NPT bottom connection. Model X141 gauges are available installed on new valves and must be specified on the customer Purchase Order. Consult factory for other available materials.

Available Pressure Ranges

X141 Gauge Assembly (2 1/2" Diameter Dial)

Pressure Range*	Part Number
0 - 100 psi	20534302K
0 - 160 psi	20534311J
0 - 200 psi	20534303J
0 - 300 psi	20534304H
0 - 400 psi	20534305G

X141 Gauge Assembly (4" Diameter Dial)

Pressure Range*	Part Number
0 - 100 psi	20534307E
0 - 200 psi	20534308D
0 - 300 psi	20534309C
0 - 400 psi	20534310K

Typical X141 Installation

Typical Installation with two X141 Gauges

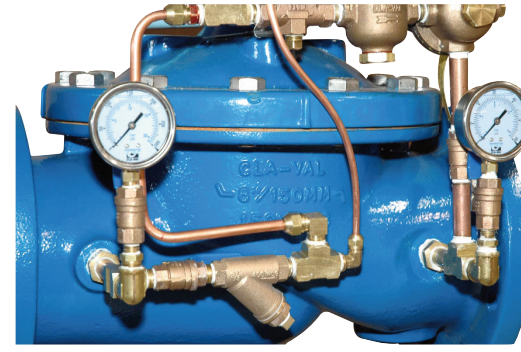

*Specify desired pressure range and valve location (inlet or outlet) on order.

©Copyright Cla-Val 2019 • Printed in USA • Specifications subject to change without notice.

X141

Cla-Val 2 ½" & 4" Gauge Option

Model X141
4" Pressure Gauge

- **Liquid-Filled**
- **Dual Scale (PSI / BAR)**
- **Long Life Stainless Steel Construction**
- **Tamper-Resistant Design**
- **2 ½" and 4" Diameter Sizes**
- **Isolation Valve Included**

The Cla-Val Model X141 Pressure Gauge Option consists of liquid-filled pressure gauges with Cla-Val Logo installed with ¼" CK2 Bronze Isolation Valves on main valve inlet and outlet. Gauges are waterproof, shock resistant, and fully enclosed with Stainless Steel case and Bronze wetted parts. All gauges have dual scale (PSI/BAR) and 1.5% F.S. accuracy with 1/4" NPT bottom connection. 2 ½" Diameter Dial supplied with 6" and smaller valves. 4" Diameter Dial supplied with 8" and larger valves. Available installed on new valves and must be specified on customer Purchase Order. Other materials available consult factory.

Available Pressure Ranges

X141 Gauge Assembly for 6" and smaller valves (2 1/2" Diameter Dial)

Pressure Range*	Part Number
0 - 60 psi	20534301 A
0 - 100 psi	20534302K
0 - 160 psi	20534311J
0 - 200 psi	20534303J
0 - 300 psi	20534304H
0 - 400 psi	20534305G

X141 Gauge Assembly for 8" and larger valves (4" Diameter Dial)

Pressure Range*	Part Number
0 - 60 psi	20534306F
0 - 100 psi	20534307E
0 - 200 psi	20534308D
0 - 300 psi	20534309C
0 - 400 psi	20534310K

Typical Installation of X141

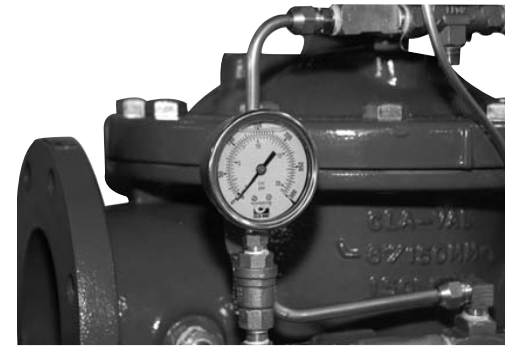

Typical Installation of X141 Both Gauges Installed

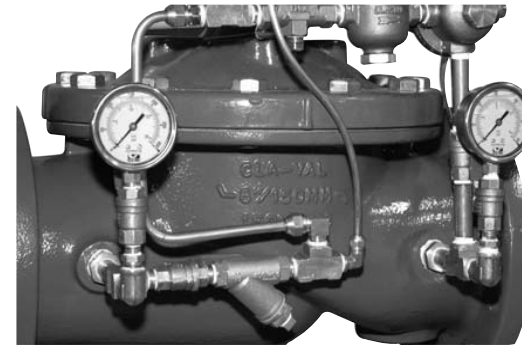

*Specify desired pressure range and valve location (inlet or outlet) on order.

CLA-VAL P.O. Box 1325 • Newport Beach, CA 92659-0325 • Phone: 949-722-4800 • Fax: 949-548-5441 • E-mail: claval@cla-val.com • Website cla-val.com
©Copyright Cla-Val 2011 Printed in USA Specifications subject to change without notice.

CLA-VAL™

—MODEL— **X101**

Valve Position Indicator & Pilot System Components

- **Positive Visual Indicator**
- **Frictionless**
- **Leak Proof**
- **Easy Maintenance and Cleaning**
- **Protected Indicator Rod**

The Cla-Val Model X101 Visual Position Indicator is designed to display Cla-Val valve position quickly and easily. A solid brass indicator rod fastened directly to the valve stem moves up and down inside a pyrex tube. The tube is contained within a brass housing which is open on two opposite sides to permit clear vision of the indicator rod.

To purge air that may be trapped in the valve cover, a vent valve in the top of the housing is provided. Model X101 valve position indicator is furnished complete for installation on specified size Cla-Val Automatic Control Valve.

Dimensions

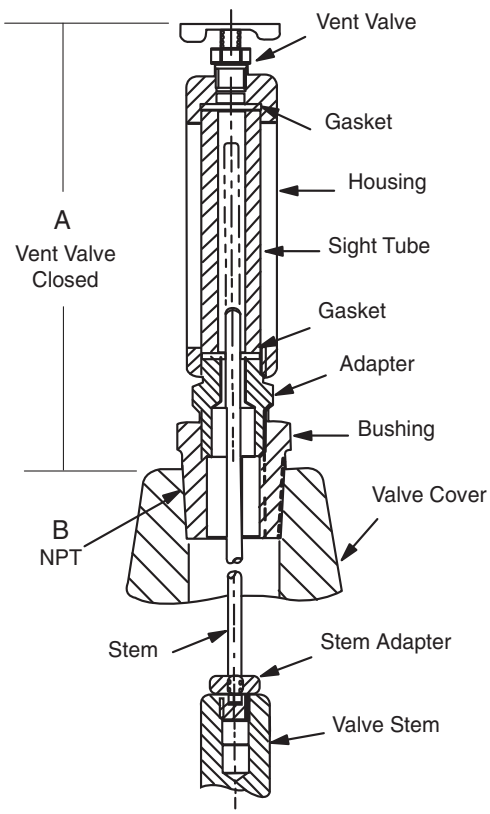

VALVE SIZE	A INCHES	B NPT
1"	5.88	1/4"
1 1/4"	3.21	1/4"
1 1/2"	3.21	1/4"
2"	3.33	1/2"
2 1/2"	3.33	1/2"
3"	3.33	1/2"
4"	4.52	3/4"
6"	4.52	3/4"
8"	5.83	1"
10"	7.70	1"
12"	8.20	1 1/4"
14"	8.20	1 1/2"
16"	10.81	2"
18"	12.04	1"
20"	12.04	1"
24"	12.04	1"

Dimension "A" is height added to valve by indicator assembly

Specifications

Sizes:	1" thru 24"
Materials:	Brass, Pyrex Tube
Pressure Rating:	400 psi
Optional Material:	Stainless Steel

Installation

Can be installed on any Cla-Val basic main valve in a few minutes. Simply replace the fitting on top of the valve cover with the indicator assembly.

When Ordering, Please Specify

1. Valve Size
2. Catalog No. X101
3. Valve Series No. (Appears on Valve Nameplate)
4. Optional Material
   Stainless Steel

CSM-11 Solenoid Control

Body Material

Standard: Bronze with Monel Trim

Option: Bronze with Stainless Steel Trim

CDS6A Altitude Control

Wetted Body Material

Standard: Bronze with Stainless Steel Trim

No. of Springs	Altitude Ranges
1	5 - 40 ft
2	30 - 80 ft
3	70 - 120 ft
4	110 - 160 ft
5	150 - 200 ft

CDC-1 Check Valve

Size	Body Material	Trim Material
3/8"-1/2"	Brass	Delrin

CSC Swing Check Valve

Size	Body Material	Trim Material
3/8"-1"	Brass	Brass/Buna N

CN Series - Needle Valves

Size	Body Material		Trim Material
1/4"-1"	Standard:	Bronze	Brass
	Option:	Stainless Steel	Stainless Steel

CK Series - Isolation Valve

Size	Body Material		Trim Material
3/8"-1"	Standard:	Bronze	Stainless Steel/Teflon
	Option:	Stainless Steel	Stainless Steel/Teflon

CLA-VAL®

CLA-VAL

1701 Placentia Avenue • Costa Mesa, CA 92627

800-942-6326 • Fax: 949-548-5441 • Web Site: cla-val.com • E-mail: info@cla-val.com

CLA-VAL CANADA
4687 Christie Drive
Beamsville, Ontario
Canada L0R 1B4
Phone: 905-563-4963
E-mail sales@cla-val.ca

CLA-VAL EUROPE
Chemin des Mésanges 1
CH-1032 Romanel/
Lausanne, Switzerland
Phone: 41-21-643-15-55
E-mail: cla-val@cla-val.ch

CLA-VAL UK
Dainton House, Goods Station Road
Tunbridge Wells
Kent TN1 2 DH England
Phone: 44-1892-514-400
E-mail: info@cla-val.co.uk

CLA-VAL FRANCE
Porte du Grand Lyon 1
ZAC du Champ du Périer
France - 01700 Neyron
Phone: 33-4-72-25-92-93
E-mail: cla-val@cla-val.fr

CLA-VAL PACIFIC
45 Kennaway Road
Woolston, Christchurch, 8023
New Zealand
Phone: 64-39644860
www.cla-valpacific.com
E-mail: info@cla-valpacific.com

E-X101 (R-02/2019)

©COPYRIGHT CLA-VAL 2019 Printed in USA Specifications subject to change without notice.

visit www.cla-val-latinamerica.com for Spanish literature

CLA-VAL

X101

Valve Position Indicator

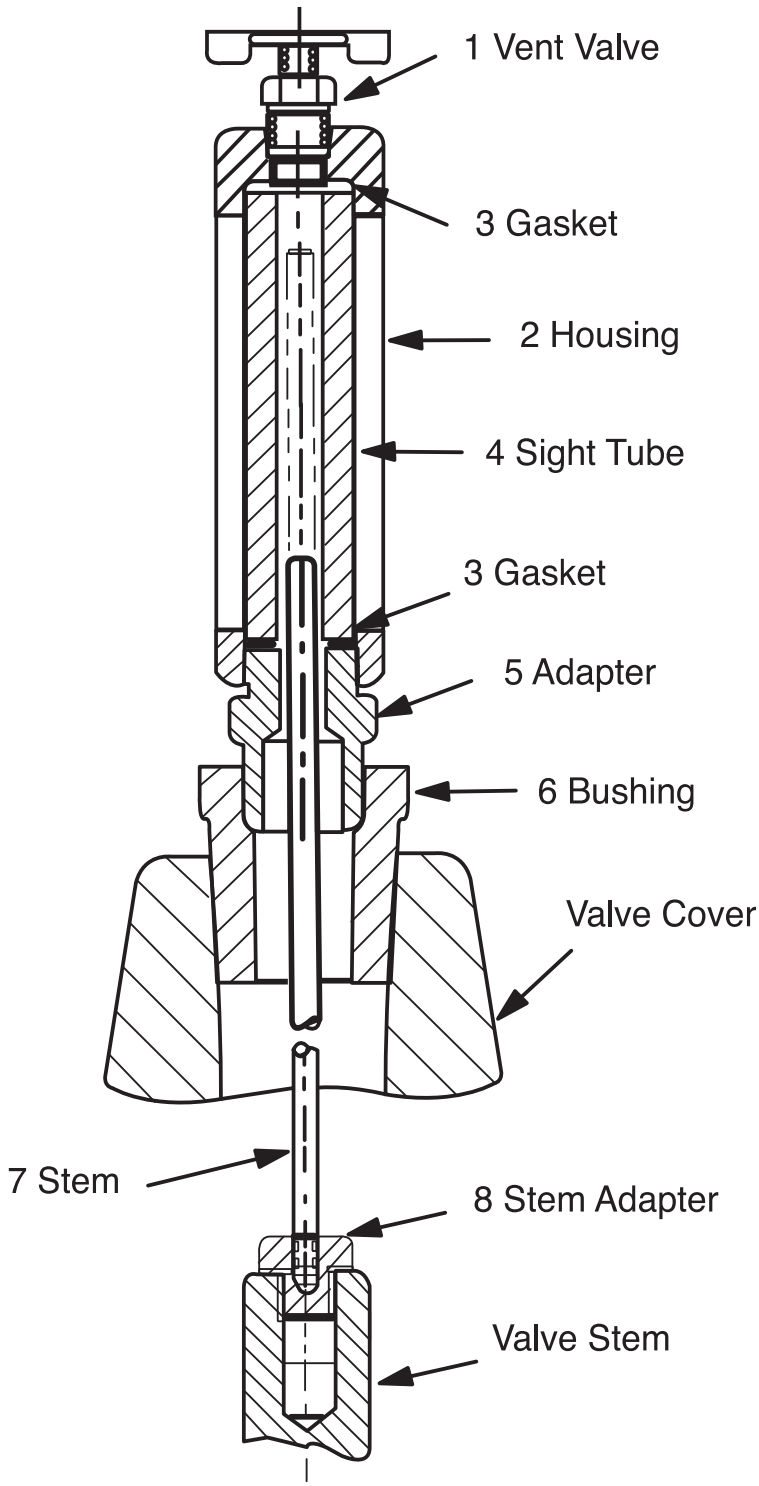

COMPLETE X101	
Size	**Stock No.**
1 1/4 - 1 1/2	C2812A
2	C8972G
2 1/2	C2607E
3	C2609A
4	9710001A
6	9710002J
8	C8581F
10	C9187A
12	31420D
14	30256C
16	30251D

ITEM	DESCRIPTION	MATERIAL
1	Vent Valve	Brass
2	Housing	Brass
3	*Gasket (2 Required)	Buna-N®
4	*Sight Tube	Pyrex
5	Adapter	Brass
6	Busing	Brass
7	Stem	Brass
8	Stem Adapter	Brass

When ordering parts, please specify:
- All Nameplate data
- Item Number
- Description
- Material
- Part Number

CLA-VAL P.O. Box 1325 • Newport Beach, CA 92659-0325 • Phone: 949-722-4800 • Fax: 949-548-5441 • E-mail: claval@cla-val.com • Website cla-val.com
©Copyright Cla-Val 2011 Printed in USA Specifications subject to change without notice.

X43
Strainer

ITEM	DESCRIPTION	MATERIAL
1	Pipe Plug	Stainless Steel
2	Strainer Plug	Stainless Steel
3	Gasket	Fiber
4	Screen	Stainless Steel
5	Body	Stainless Steel
No parts available. Replacement assembly only.		

Standard 60 mesh pilot system strainer for fluid service.

Size	Stock Number
3/8 x 3/8	8850604D

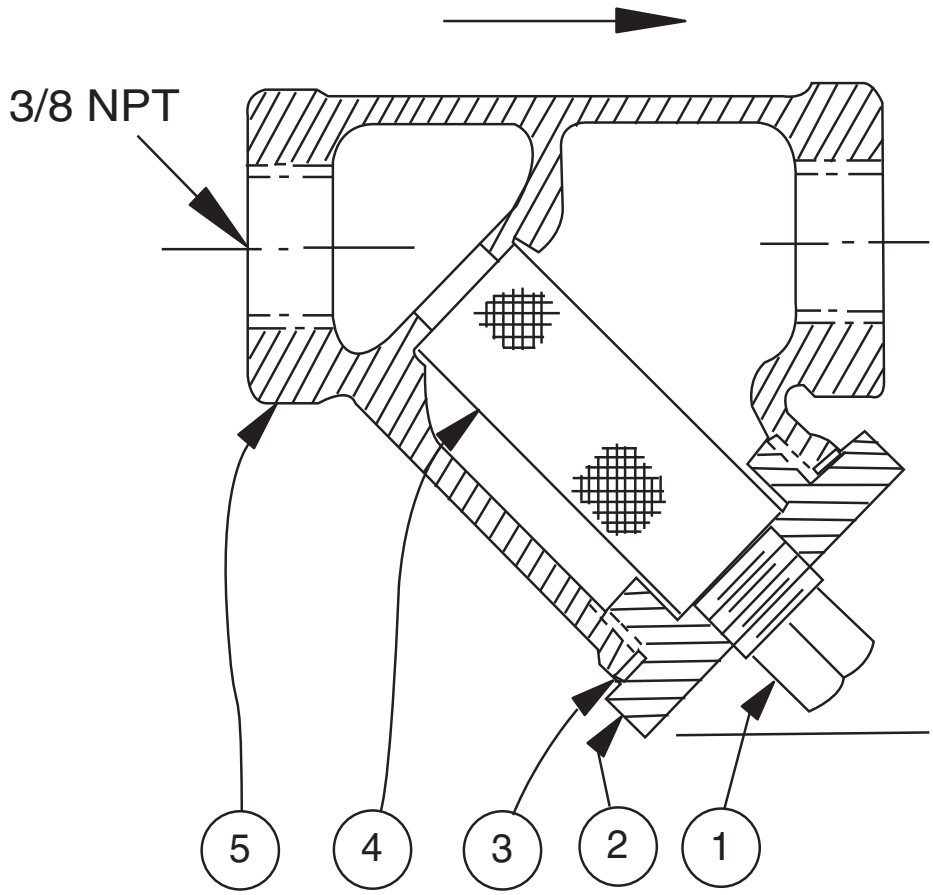

© Copyright Cla-Val 2019 Printed in USA Specifications subject to change without notice.

Cla-Val Product Identification

How to Order

Proper Identification

For ordering repair kits, replacement parts, or for inquiries concerning valve operation, it is important to properly identify Cla-Val products already in service by including all nameplate data with your inquiry. Pertinent product data includes valve function, size, material, pressure rating, end details, type of pilot controls used and control adjustment ranges.

Identification Plates

For product identification, cast-in body markings are supplemented by identification plates as illustrated on this page. The plates, depending on type and size of product, are mounted in the most practical position. **It is extremely important that these identification plates are not painted over, removed, or in any other way rendered illegible.**

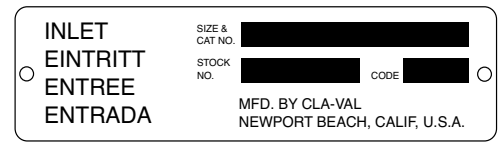

This brass plate appears on valves sized $2^1/_2$" and larger and is located on the top of the inlet flange.

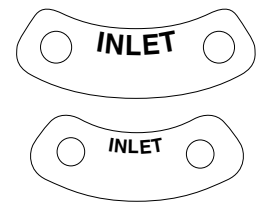

These two brass plates appear on $^3/_8$", $^1/_2$", and $^3/_4$" size valves and are located on the valve cover.

This brass plate appears on altitude valves only and is found on top of the outlet flange.

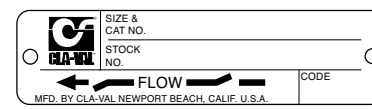

These two brass plates appear on threaded valves 1" through 3" size or flanged valves 1" through 2". It is located on only one side of the valve body.

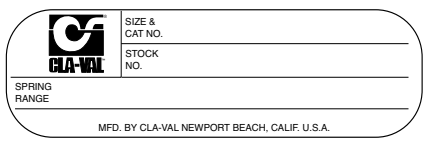

This tag is affixed to the cover of the pilot control valve. The adjustment range appears in the spring range section.

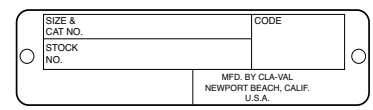

This brass plate is used to identify pilot control valves. The adjustment range is stamped into the plate.

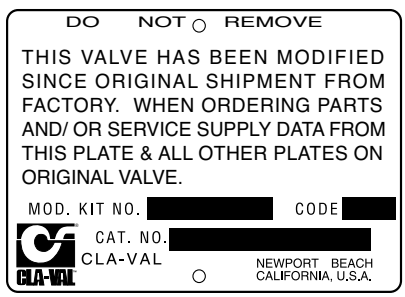

This aluminum plate is included in pilot system modification kits and is to be wired to the new pilot control system after installation.

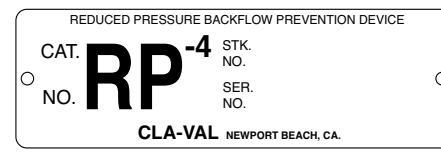

This brass plate is used on our backflow prevention assemblies. It is located on the side of the Number Two check (2" through 10"). The serial number of the assembly is also stamped on the top of the inlet flange of the Number One check.

HOW TO ORDER

Because of the vast number of possible configurations and combinations available, many valves and controls are not shown in published product and price lists. For ordering information, price and availability on product that are not listed, please contact your local Cla-Val office or our factory office located at:

P. O. Box 1325
Newport Beach, California 92659-0325
(949) 722-4800
FAX (949) 548-5441

SPECIFY WHEN ORDERING

- Model Number
- Globe or Angle Pattern
- Adjustment Range (As Applicable)
- Valve Size
- Threaded or Flanged
- Body and Trim Materials
- Optional Features
- Pressure Class

UNLESS OTHERWISE SPECIFIED

- Globe or angle pattern are the same price
- Ductile iron body and bronze trim are standard
- X46 Flow Clean Strainer or X43 "Y" Strainer are included
- CK2 Isolation Valves are included in price on 4" and larger valve sizes (6" and larger on 600 Series)

LIMITED WARRANTY

Automatic valves and controls as manufactured by Cla-Val are warranted for three years from date of shipment against manufacturing defects in material and workmanship that develop in the service for which they are designed, provided the products are installed and used in accordance with all applicable instructions and limitations issued by Cla-Val. Electronic components manufactured by Cla-Val are warranted for one year from the date of shipment.

We will repair or replace defective material, free of charge, that is returned to our factory, transportation charges prepaid, if upon inspection, the material is found to have been defective at time of original shipment. This warranty is expressly conditioned on the purchaser's providing written notification to Cla-Val immediate upon discovery of the defect.

Components used by Cla-Val but manufactured by others, are warranted only to the extent of that manufacturer's guarantee.

This warranty shall not apply if the product has been altered or repaired by others, Cla-Val shall make no allowance or credit for such repairs or alterations unless authorized in writing by Cla-Val.

DISCLAIMER OF WARRANTIES AND LIMITATIONS OF LIABILITY

The foregoing warranty is exclusive and in lieu of all other warranties and representations, whether expressed, implied, oral or written, including but not limited to any implied warranties or merchantability or fitness for a particular purpose. All such other warranties and representations are hereby cancelled.

Cla-Val shall not be liable for any incidental or consequential loss, damage or expense arising directly or indirectly from the use of the product. Cla-Val shall not be liable for any damages or charges for labor or expense in making repairs or adjustments to the product. Cla-Val shall not be liable for any damages or charges sustained in the adaptation or use of its engineering data and services. No representative of Cla-Val may change any of the foregoing or assume any additional liability or responsibility in connection with the product. The liability of Cla-Val is limited to material replacements F.O.B. Newport Beach, California.

TERMS OF SALE

ACCEPTANCE OF ORDERS

All orders are subject to acceptance by our main office at Newport Beach, California.

CREDIT TERMS

Credit terms are net thirty (30) days from date of invoice.

PURCHASE ORDER FORMS

Orders submitted on customer's own purchase order forms will be accepted only with the express understanding that no statements, clauses, or conditions contained in said order form will be binding on the Seller if they in any way modify the Seller's own terms and conditions of sales.

PRODUCT CHANGES

The right is reserved to make changes in pattern, design or materials when deemed necessary, without prior notice.

PRICES

All prices are F.O.B. Newport Beach, California unless expressly stated otherwise on our acknowledgement of the order. Prices are subject to change without notice. The prices at which any order is accepted are subject to adjustment to the Seller's price in effect at the time of shipment. Prices do not include sales, excise, municipal, state or any other Government taxes. Minimum order charge $100.00.

RESPONSIBILITY

We will not be responsible for delays resulting from strikes, accidents, negligence of carriers, or other causes beyond our control. Also, we will not be liable for any unauthorized product alterations or charges accruing there from.

RISK

All goods are shipped at the risk of the purchaser after they have been delivered by us to the carrier. Claims for error, shortages, etc., must be made upon receipt of goods.

EXPORT SHIPMENTS

Export shipments are subject to an additional charge for export packing.

RETURNED GOODS

1. Customers must obtain written approval from Cla-Val prior to returning any material.
2. Cla-Val reserves the right to refuse the return of any products.
3. Products more than six (6) months old cannot be returned for credit.
4. Specially produced, non-standard models cannot be returned for credit.
5. Rubber goods such as diaphragms, discs, o-rings, etc., cannot be returned for credit, unless as part of an unopened vacuum sealed repair kit which is less than six months old.
6. Goods authorized for return are subject to a 35% ($100 minimum) restocking charge and a service charge for inspection, reconditioning, replacement of rubber parts, retesting, repainting and repackaging as required.
7. Authorized returned goods must be packaged and shipped prepaid to Cla-Val, 1701 Placentia Avenue, Costa Mesa, California 92627.

CLA-VAL®

E-Product I.D. (R-3/2011)

CLA-VAL
PO Box 1325 Newport Beach CA 92659-0325
Phone: 949-722-4800 • Fax: 949-548-5441

CLA-VAL CANADA
4687 Christie Drive
Beamsville, Ontario
Canada L0R 1B4
Phone: 905-563-4963
Fax: 905-563-4040

CLA-VAL EUROPE
Chemin dés Mesanges 1
CH-1032 Romanel/
Lausanne, Switzerland
Phone: 41-21-643-15-55
Fax: 41-21-643-15-50

www.cla-val.com

©COPYRIGHT CLA-VAL 2011 Printed in USA
Specifications subject to change without notice.

Represented By:

CLA-VAL

—MODEL— **REPAIR KITS**

Model 100-01 Hytrol Main Valve

BUNA-N MATERIAL				
	RUBBER KIT	REPAIR KIT	REBUILD ASSEMBLY	STUD & NUT KIT
	STOCK NO.	STOCK NO.	STOCK NO.	STOCK NO.
3/8”	9169801K		21176614B	21176633J
1/2”	9169802H	21176602F	21176615A	21176634H
3/4”	9169802H	21176602F	21176615A	21176634H
1” Non-Guided	9169803F	21176601G	21176616K	21176636F
1”	9169804D	21176603E	21176617J	21176636F
1 1/4”	9169804D	21176603E	21176617J	21176636F
1 1/2”	9169804D	21176603E	21176617J	21176636F
2”	9169805A	21176608K	21176618H	21176637E
2 1/2”	9169811J	21176609J	21176619G	21176638D
3”	9169812G	21176604D	21176620D	21176639C
4”	9169813E	21176605C	21176621C	21176640K
6”	9169815K	21176606B	21176622B	21176641J
8”	9817901D	21176607A	21176623A	21176642H
10”	9817902B	21176610F	21176624K	21176643G
12”	9817903K	21176611E	21176625J	21176644F
14”	9817904H	21176612D	21176626H	21176645E
16”	9817905E	21176613C	21176627G	21176645E

Model 100-20 Hytrol Main Valve

BUNA-N MATERIAL				
	RUBBER KIT	REPAIR KIT	REBUILD ASSEMBLY	STUD & NUT KIT
	STOCK NO.	STOCK NO.	STOCK NO.	STOCK NO.
3”	9169805A	21176608K	21176618H	21176637E
4”	9169812G	21176604D	21176620D	21176639C
6”	9169813E	21176605C	21176621C	21176640K
8”	9169815K	21176606B	21176622B	21176641J
10”	9817901D	21176607A	21176623A	21176642H
12”	9817902B	21176610F	21176624K	21176643G
14”	9817903K	21176611E	21176625J	21176644F
16”	9817903K	21176611E	21176625J	21176644F

Consult factory for larger sizes

Rubber Kit Includes: Diaphragm, Disc, Spacer Washers

Repair Kit Includes: Diaphragm, Disc, Spacer Washers, Epoxy Coated Disc Retainer, Epoxy Coated Diaphragm Washer, Protective Washer

Rebuild Assembly Includes: Diaphragm, Disc, Spacer Washers, Epoxy Coated Disc Retainer, Epoxy Coated Diaphragm Washer, Protective Washer, Stainless Steel Bolts & Washers (6" & Below), Stainless Steel Studs, Nuts, & Washers (8" & Above), Stem, Stem Nut, Disc Guide, Standard Cover Spring, Cover Washer

Stud & Nut Kit Includes: Stainless Steel Bolts & Washers (6" & Below), Stainless Steel Studs, Nuts, & Washers (8" & Above)

Repair Kits for 100-02/100-21 Powertrol and 100-03/100-22 Powercheck Main Valves

For: Powertrol and Powercheck Main Valves—**150 Pressure Class Only**

Includes: Diaphragm, Disc (or Disc Assembly) and O-rings and full set of spare Spacer Washers.

Valve Size	Kit Stock Number 100-02	Valve Size	Kit Stock Number	
			100-02 & 100-03	100-21 & 100-22
⅜"	9169901H	2½"	9169910J	N/A
½" & ¾"	9169902F	3"	9169911G	9169905J
1"	9169903D	4"	9169912E	9169911G
1¼" & 1½"	9169904B	6"	9169913C	9169912E
2"	9169905J	8"	99116G	9169913C
		10"	9169939H	99116G
		12"	9169937B	9169939H

Larger Sizes: Consult Factory.

Repair Kits for 100-04/100-23 Hy-Check Main Valves

For: Hy-Check Main Valves—**150 Pressure Class Only**

Includes: Diaphragm, Disc and O-Rings and full set of spare Spacer Washers.

Valve Size	Kit Stock Number		Valve Size	Kit Stock Number	
	100-04	100-23		100-04	100-23
4"	20210901B	N/A	12"	20210905H	20210904J
6"	20210902A	20210901B	14"	20210906G	N/A
8"	20210903K	20210902A	16"	20210907F	20210905H
10"	20210904J	20210903K	20"	N/A	20210907F
			24"	N/A	20210907F

Larger Sizes: Consult Factory.

Repair Kits for Pilot Control Valves (In Standard Materials Only)

Includes: Diaphragm, Disc (or Disc Assembly), O-Rings, Gaskets or spare Screws as appropriate.

BUNA-N® (Standard Material)				**VITON** (For KB Controls)	
Pilot Control	Kit Stock Number	Pilot Control	Kit Stock Number	Pilot Control	Kit Stock Number
CDB	9170006C	CFM-9	12223E	CDB-KB	9170012A
CDB-30	9170023H	CRA (w/bucking spring)	9170001D	CRA-KB	N/A
CDB-31	9170024F	CRD (w/bucking spring)	9170002B	CRD-KB (w/bucking spring)	9170008J
CDB-7	9170017K	CRD (no bucking spring)	9170003K	CRL-KB	9170013J
CDH-2	18225D	CRD-18	20275401K	CDHS-2BKB	9170010E
CDHS-2	44607A	CRD-22	98923G	CDHS-2FKB	9170011C
CDHS-2B	9170004H	CRL (55F, 55L)	9170007A	CDHS-18KB (no bucking spring)	9170009G
CDHS-2F	9170005E	CRL60/55L-60	9170033G	102C-KB	1726202D
CDHS-3C-A2	24657K	CRL60/55L60 1"	9170042H		
CDHS-8A	2666901A	CRL-4A	43413E		
CDHS-18	9170003K	CRL-5 (55B)	65755B		
CDS-4	9170014G	CRL-5A (55G)	20666E		
CDS-5	14200A	CRL-18	20309801C		
CDS-6	20119301A	Universal CRL	9170041K		
CDS-6A	20349401C	CV	9170019F		
CFCM-M1	1222301C	X105L (O-ring)	00951E	Buna-N®	
CFM-2	12223E	102B-1	1502201F		
CFM-7	1263901K	102C-2	1726201F	CRD Disc Ret. (Solid)	C5256H
CFM-7A	1263901K	102C-3	1726201F	CRD Disc Ret. (Spring)	C5255K

Repair Assemblies (In Standard Materials Only)

Control	Description	Stock Number
CF1-C1	Pilot Assembly Only	89541H
CF1-Cl	Complete Float Control less Ball and Rod	89016A
CFC2-C1	Disc, Distributor and Seals	2674701E
CSM 11-A2-2	Mechanical Parts Assembly	97544B
CSM 11-A2-2	Pilot Assembly Only	18053K
33A 1"	Complete Internal Assembly and Seal	2036030B
33A 2"	Complete Internal Assembly and Seal	2040830J

When ordering, please give complete nameplate data of the valve and/or control being repaired. MINIMUM ORDER CHARGE APPLIES

© Copyright Cla-Val 2019 Printed in USA Specifications subject to change without notice.