CLA-VAL
AUTOMATIC CONTROL VALVES

210-27/610-27

Place this manual with personnel responsible for maintenance of this valve

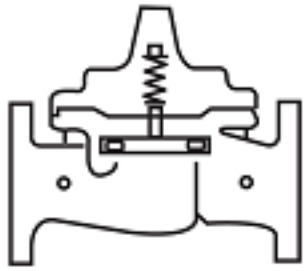

Installation

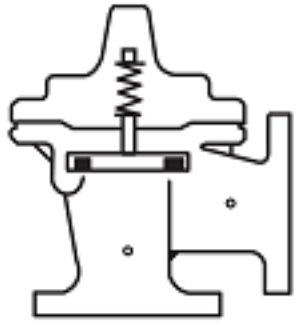

Operation

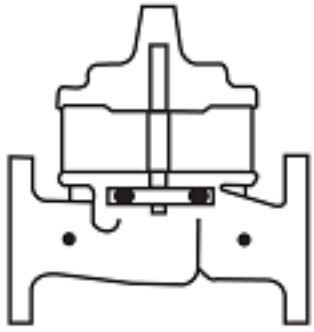

Maintenance

CLA-VAL

CLA-VAL • 1701 Placentia Avenue • Costa Mesa, CA 92627 • (949) 722-4800 • info@cla-val.com
CLA-VAL CANADA LTD. • 4687 Christie Drive • Beamsville, Ontario, LOR 1B4 Canada • (905) 563-4963
www.cla-val.com • info@cla-val.com

CLA-VAL CO. NEWPORT BEACH, CALIFORNIA

CATALOG NO.	DRAWING NO.	REV
210-27/610-27	89587	J

TYPE OF VALVE AND MAIN FEATURES

ALTITUDE AND SOLENOID SHUTOFF VALVE WITH RETURN FLOW FEATURE (RETURN FLOW NOT UNDER COMMAND OF SOLENOID)

DESIGN		
DRAWN	LFH	7-18-84
CHK'D	WEP	7-18-84
APV'D	CH	7-19-84

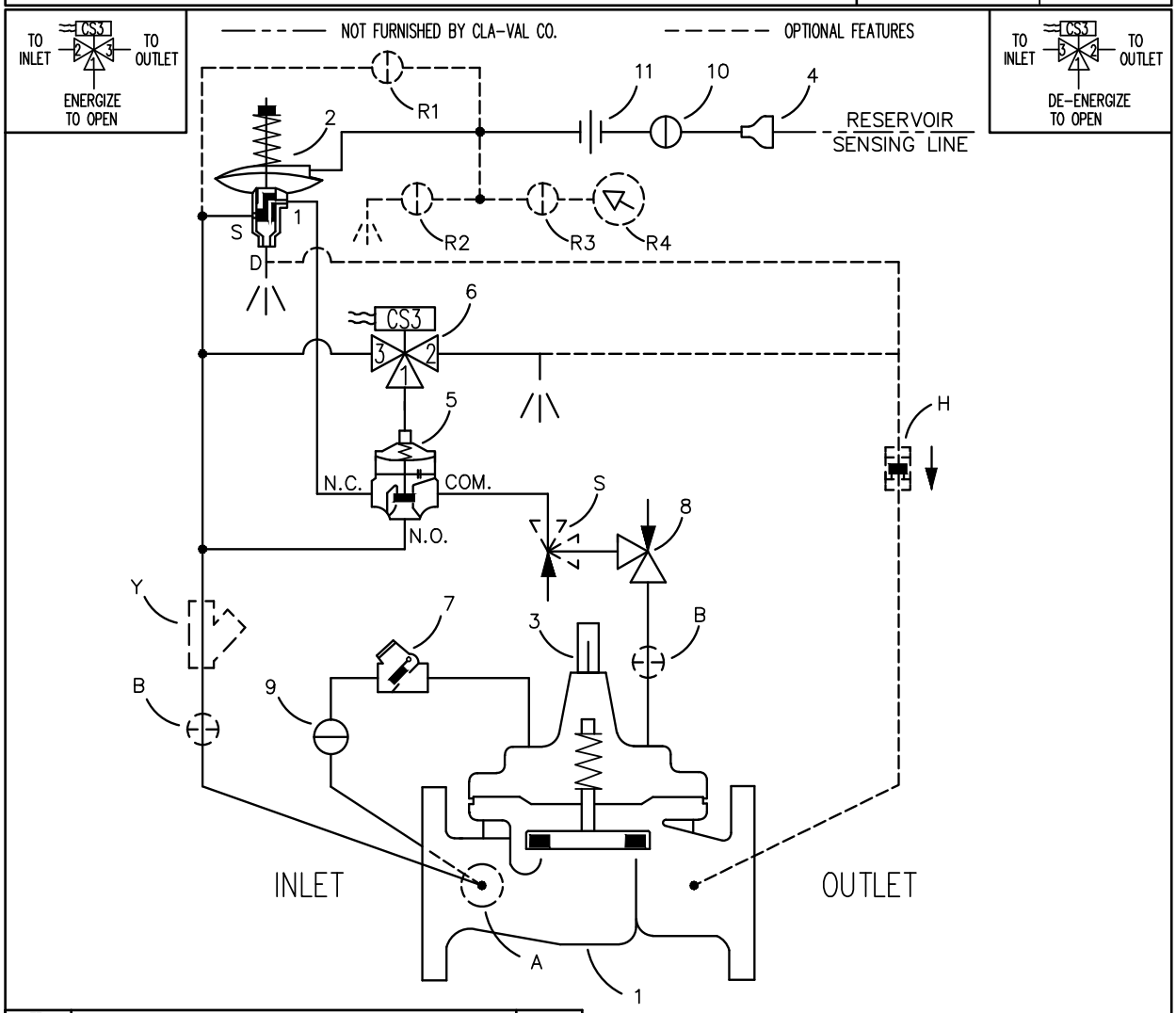

ITEM NO.	BASIC COMPONENTS	QTY	ITEM NO.		QTY
1	100-01 HYTROL (210-27) MAIN VALVE	1	8	CV FLOW CONTROL (CLOSING)	1
	100-20 HYTROL (610-27) MAIN VALVE		9	CK2 COCK (ISOLATION VALVE)	1
2	CDS6A ALTITUDE CONTROL	1	10	CK2 COCK (ISOLATION VALVE)	1
3	X101 VALVE POSITION INDICATOR	1	11	UNION	1
4	BELL REDUCER	1			
5	102C-3H 3-WAY VALVE	1			
6	CS3 SOLENOID CONTROL	1			
7	CSC SWING CHECK	1			

OPTIONAL FEATURE SUFFIX	ADDED TO CATALOG NUMBER				
A	X46A FLOW CLEAN STRAINER	1			
B	CK2 COCK (ISOLATION VALVE)	2			
H	CDC CHECK VALVE	1			
R	RESERVOIR GAUGE WITH TESTER	1			
S	CV FLOW CONTROL (OPENING)	1			
Y	X43 "Y" STRAINER	1			

CAD REVISION RECORD - DO NOT REVISE MANUALLY

LTR	DESCRIPTION	BY	DATE
A-E	SEE REVISION FILE.		
F	CHANGE SOLENOID DATA BACK TO "D" REV. (ECO 13928)	EK	6-25-93
G	CHANGED CDS5 TO CDS6 (ECO 17665)	AK	7-02-99
H	ADDED "R" OPTIONAL FEATURE (ECO 22035)	EK	10-15-10
J	ITEM 10: CK2 WAS OPTIONAL; ADDED ITEM 11: UNION; ITEM 2 CDS6A WAS CDS6 (ECO 25931)	EA	10-5-16

"THIS DRAWING IS THE PROPERTY OF CLA-VAL CO. AND SAME AND COPIES MADE THEREOF, IF ANY, SHALL BE RETURNED TO IT UPON DEMAND. DELIVERY AND DISCLOSURE HEREOF ARE MADE SOLELY UPON CONDITION THAT THE SAME SHALL NOT BE USED, COPIED OR REPRODUCED, NOR SHALL THE SUBJECT HEREOF BE DISCLOSED IN ANY MANNER TO ANYONE FOR ANY PURPOSE, EXCEPT AS HEREIN AUTHORIZED, WITHOUT PRIOR WRITTEN APPROVAL OF CLA-VAL CO. THIS DRAWING IS SUBMITTED CONFIDENTIALLY AND MAY NOT BE USED IN THE MANUFACTURE OF ANY MATERIAL OR PRODUCT OTHER THAN SUCH MATERIALS AND PRODUCTS FURNISHED TO CLA-VAL CO. WHETHER OR NOT THE EQUIPMENT OR INFORMATION SHOWN HEREON IS PATENTED OR OTHERWISE PROTECTED, FULL TITLE AND COPYRIGHTS, IF ANY, IN AND TO THIS DRAWING AND/OR INFORMATION DELIVERED OR SUBMITTED ARE FULLY RESERVED BY CLA-VAL CO."

CLA-VAL CO. NEWPORT BEACH, CALIFORNIA	CATALOG NO. 210-27/610-27	DRAWING NO. 89587	REV J

TYPE OF VALVE AND MAIN FEATURES

ALTITUDE AND SOLENOID SHUTOFF VALVE WITH RETURN FLOW FEATURE (RETURN FLOW NOT UNDER COMMAND OF SOLENOID)

DESIGN		
DRAWN	LFH	7-18-84
CHK'D	WEP	7-18-84
APV'D	CH	7-19-84

OPERATING DATA

I. SOLENOID CONTROL FEATURE:

SOLENOID CONTROL (6) IS A DIRECT ACTING, 3-WAY SOLENOID CONTROL THAT CHANGES POSITION WHEN THE COIL IS DE-ENERGIZED OR ENERGIZED. THIS APPLIES OR RELIEVES PRESSURE IN THE COVER CHAMBER OF THREE-WAY VALVE (5), PROVIDING THE OPERATION SHOWN IN THE FOLLOWING TABLE:

		210E-27/610E-27 SERIES		210D-27/610D-27 SERIES	
SOLENOID CONTROL (6)		THREE-WAY VALVE (5) POSITION	MAIN VALVE (1) POSITION	THREE-WAY VALVE (5) POSITION	MAIN VALVE (1) POSITION
POSITION	PORTS CONNECTED				
ENERGIZED	1 & 2	COM. TO N.C.	OPEN UNDER COMMAND OF CONTROL (2)	COM. TO N.O.	CLOSED
DE-ENERGIZED	1 & 3	COM. TO N.O.	CLOSED	COM. TO N.C.	OPEN UNDER COMMAND OF CONTROL (2)

II. ALTITUDE VALVE FEATURE:

ALTITUDE CONTROL (2) IS A SPRING LOADED, 3-WAY DIAPHRAGM ACTUATED CONTROL THAT SENSES PRESSURE IN THE RESERVOIR. WHEN RESERVOIR PRESSURE (LIQUID LEVEL) IS LOWER THAN THE SET POINT OF CONTROL (2), PORTS "1" AND "D" ARE INTERCONNECTED. THIS RELIEVES MAIN VALVE (1) COVER PRESSURE TO ATMOSPHERE AND THE MAIN VALVE OPENS TO FILL THE RESERVOIR. RESERVOIR SENSING PRESSURE INCREASES AS THE LIQUID LEVEL RISES IN THE RESERVOIR. WHEN RESERVOIR PRESSURE INCREASES TO THE SET POINT OF CONTROL (2), CONTROL (2) SHIFTS, INTERCONNECTING PORTS "S" AND "1". THIS PRESSURIZES THE MAIN VALVE (1) COVER AND MAIN VALVE CLOSES. ALTITUDE CONTROL (2) ADJUSTMENT: TURN THE SPRING ADJUSTING NUT CLOCKWISE TO INCREASE THE LIQUID LEVEL SHUTOFF POINT; COUNTERCLOCKWISE TO DECREASE THE LIQUID LEVEL SHUTOFF POINT.

III. RETURN FLOW FEATURE:

WHEN OUTLET PRESSURE IS HIGHER THAN INLET PRESSURE, CHECK VALVE (7) OPENS. THIS RELIEVES MAIN VALVE COVER PRESSURE TO THE NORMAL INLET OF THE MAIN VALVE AND THE MAIN VALVE OPENS FOR RETURN FLOW.

IV. CLOSING SPEED CONTROL:

FLOW CONTROL (8) CONTROLS THE CLOSING SPEED OF THE MAIN VALVE. TURN THE ADJUSTING STEM CLOCKWISE TO MAKE THE MAIN VALVE CLOSE SLOWER.

CAD REVISION RECORD - DO NOT REVISE MANUALLY

LTR	DESCRIPTION	BY	DATE
	SEE SHEET 1		

"THIS DRAWING IS THE PROPERTY OF CLA-VAL CO. AND SAME AND COPIES MADE THEREOF, IF ANY, SHALL BE RETURNED TO IT UPON DEMAND. DELIVERY AND DISCLOSURE HEREOF ARE MADE SOLELY UPON CONDITION THAT THE SAME SHALL NOT BE USED, COPIED OR REPRODUCED, NOR SHALL THE SUBJECT HEREOF BE DISCLOSED IN ANY MANNER TO ANYONE FOR ANY PURPOSE, EXCEPT AS HEREIN AUTHORIZED, WITHOUT PRIOR WRITTEN APPROVAL OF CLA-VAL CO. THIS DRAWING IS SUBMITTED CONFIDENTIALLY AND MAY NOT BE USED IN THE MANUFACTURE OF ANY MATERIAL OR PRODUCT OTHER THAN SUCH MATERIALS AND PRODUCTS FURNISHED TO CLA-VAL CO. WHETHER OR NOT THE EQUIPMENT OR INFORMATION SHOWN HEREON IS PATENTED OR OTHERWISE PROTECTED, FULL TITLE AND COPYRIGHTS, IF ANY, IN AND TO THIS DRAWING AND/OR INFORMATION DELIVERED OR SUBMITTED ARE FULLY RESERVED BY CLA-VAL CO."

CLA-VAL CO. NEWPORT BEACH, CALIFORNIA	CATALOG NO.	DRAWING NO.	REV
TYPE OF VALVE AND MAIN FEATURES	210-27/610-27	89587	J
ALTITUDE AND SOLENOID SHUTOFF VALVE WITH RETURN FLOW FEATURE (RETURN FLOW NOT UNDER COMMAND OF SOLENOID)	DESIGN		
	DRAWN	LFH	7-18-84
	CHK'D	WEP	7-18-84
	APV'D	CH	7-19-84

OPERATING DATA-CONTINUED

V. OPTIONAL FEATURE OPERATING DATA:

SUFFIX A (FLOW CLEAN STRAINER):
A SELF-CLEANING STRAINER IS INSTALLED IN THE MAIN VALVE INLET BODY BOSS WHICH PROTECTS THE PILOT SYSTEM FROM FOREIGN PARTICLES

SUFFIX B (ISOLATION VALVES):
CK2 COCKS (B) ARE USED TO ISOLATE THE PILOT SYSTEM FROM MAIN LINE PRESSURE. THESE VALVES MUST BE OPEN DURING NORMAL OPERATION.

SUFFIX H (PILOT DRAIN TO OUTLET):
CDC CHECK VALVE (H) IS USED WHEN PILOT DRAIN TO ATMOSPHERE IS NOT DESIRED. WHEN OUTLET PRESSURE IS HIGHER THAN INLET PRESSURE, CHECK VALVE (H) CLOSES.

SUFFIX R (RESERVOIR GAUGE WITH TESTER):
TO SET THE RESERVOIR PRESSURE FOR ALTITUDE CONTROL (2), ISOLATE RESERVOIR SENSING LINE. CLOSE CK2 COCK (R2) AND OPEN CK2 COCKS (R1) AND (R3). THIS APPLIES PRESSURE TO ALTITUDE CONTROL (2) SENSING CHAMBER. WHEN THE DESIRED PRESSURE HAS BEEN REACHED BY READING PRESSURE GAUGE (R4), ADJUST ALTITUDE CONTROL (2). CLOSE CK2 COCK (R1) AND OPEN CK2 COCK (R2). THIS RELIEVES EXCESS PRESSURE TO ATMOSPHERE, SETTING THE DESIRED RESERVOIR PRESSURE FOR ALTITUDE CONTROL (2). DURING NORMAL OPERATIONS, CK2 COCKS (R1) AND (R2) MUST BE CLOSED.

SUFFIX S (OPENING SPEED CONTROL):
FLOW CONTROL (S) CONTROLS THE OPENING SPEED OF THE MAIN VALVE. TURN THE ADJUSTING STEM CLOCKWISE TO MAKE THE MAIN VALVE OPEN SLOWER.

SUFFIX Y (Y-STRAINER):
A Y-PATTERN STRAINER IS INSTALLED IN THE PILOT SUPPLY LINE TO PROTECT THE PILOT SYSTEM FROM FOREIGN PARTICLES. THE STRAINER SCREEN MUST BE CLEANED PERIODICALLY.

CAD REVISION RECORD - DO NOT REVISE MANUALLY

LTR	DESCRIPTION	BY	DATE
	SEE SHEET 1		

"THIS DRAWING IS THE PROPERTY OF CLA-VAL CO. AND SAME AND COPIES MADE THEREOF, IF ANY, SHALL BE RETURNED TO IT UPON DEMAND. DELIVERY AND DISCLOSURE HEREOF ARE MADE SOLELY UPON CONDITION THAT THE SAME SHALL NOT BE USED, COPIED OR REPRODUCED, NOR SHALL THE SUBJECT HEREOF BE DISCLOSED IN ANY MANNER TO ANYONE FOR ANY PURPOSE, EXCEPT AS HEREIN AUTHORIZED, WITHOUT PRIOR WRITTEN APPROVAL OF CLA-VAL CO. THIS DRAWING IS SUBMITTED CONFIDENTIALLY AND MAY NOT BE USED IN THE MANUFACTURE OF ANY MATERIAL OR PRODUCT OTHER THAN SUCH MATERIALS AND PRODUCTS FURNISHED TO CLA-VAL CO. WHETHER OR NOT THE EQUIPMENT OR INFORMATION SHOWN HEREON IS PATENTED OR OTHERWISE PROTECTED, FULL TITLE AND COPYRIGHTS, IF ANY, IN AND TO THIS DRAWING AND/OR INFORMATION DELIVERED OR SUBMITTED ARE FULLY RESERVED BY CLA-VAL CO."

CLA-VAL CO. NEWPORT BEACH, CALIFORNIA

CATALOG NO.	DRAWING NO.	REV
210-27/610-27	89587	J

TYPE OF VALVE AND MAIN FEATURES

ALTITUDE AND SOLENOID SHUTOFF VALVE WITH RETURN FLOW FEATURE (RETURN FLOW NOT UNDER COMMAND OF SOLENOID)

DESIGN		
DRAWN	LFH	7-18-84
CHK'D	WEP	7-18-84
APV'D	CH	7-19-84

OPERATING DATA-CONTINUED

VI. CHECK LIST FOR PROPER OPERATION:

( ) SYSTEM VALVES OPEN UPSTREAM AND DOWNSTREAM.
( ) AIR REMOVED FROM THE MAIN VALVE COVER AND PILOT SYSTEM AT ALL HIGH POINTS.
( ) CK2 COCKS (R1) AND (R2) CLOSED (OPTIONAL FEATURE).
( ) CK2 COCKS (B) OPEN (OPTIONAL FEATURE).
( ) PERIODIC CLEANING OF STRAINER (Y) IS RECOMMENDED (OPTIONAL FEATURE).
( ) CK2 COCK (9) OPEN DURING NORMAL OPERATION.
( ) CORRECT VOLTAGE TO SOLENOID CONTROL (6).
( ) CV FLOW CONTROL (8) OPEN AT LEAST 4 TURNS.
( ) CV FLOW CONTROL (S) OPEN AT LEAST 4 TURNS (OPTIONAL FEATURE).
( ) RESERVOIR SENSING LINE PROPERLY CONNECTED.

CAD REVISION RECORD - DO NOT REVISE MANUALLY

LTR	DESCRIPTION	BY	DATE
	SEE SHEET 1		

"THIS DRAWING IS THE PROPERTY OF CLA-VAL CO. AND SAME AND COPIES MADE THEREOF, IF ANY, SHALL BE RETURNED TO IT UPON DEMAND. DELIVERY AND DISCLOSURE HEREOF ARE MADE SOLELY UPON CONDITION THAT THE SAME SHALL NOT BE USED, COPIED OR REPRODUCED, NOR SHALL THE SUBJECT HEREOF BE DISCLOSED IN ANY MANNER TO ANYONE FOR ANY PURPOSE, EXCEPT AS HEREIN AUTHORIZED, WITHOUT PRIOR WRITTEN APPROVAL OF CLA-VAL CO. THIS DRAWING IS SUBMITTED CONFIDENTIALLY AND MAY NOT BE USED IN THE MANUFACTURE OF ANY MATERIAL OR PRODUCT OTHER THAN SUCH MATERIALS AND PRODUCTS FURNISHED TO CLA-VAL CO. WHETHER OR NOT THE EQUIPMENT OR INFORMATION SHOWN HEREON IS PATENTED OR OTHERWISE PROTECTED, FULL TITLE AND COPYRIGHTS, IF ANY, IN AND TO THIS DRAWING AND/OR INFORMATION DELIVERED OR SUBMITTED ARE FULLY RESERVED BY CLA-VAL CO."

Model 100-01
HYTROL VALVE

DESCRIPTION

The Cla-Val Model 100-01 Hytrol Valve is a main valve for Cla-Val Automatic Control Valves. It is a hydraulically operated, diaphragm-actuated, globe or angle pattern valve. This valve consists of three major components; body, diaphragm assembly, and cover. The diaphragm assembly is the only moving part. The diaphragm assembly uses a diaphragm of nylon fabric bonded with synthetic rubber. A synthetic rubber disc, contained on three and one half sides by a disc retainer and disc guide, forms a seal with the valve seat when pressure is applied above the diaphragm. The diaphragm assembly forms a sealed chamber in the upper portion of the valve, separating operating pressure from line pressure.

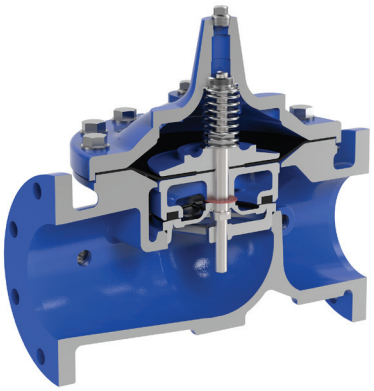

Installation

1. Before valve is installed, pipe lines should be flushed of all chips, scale and foreign matter.
2. It is recommended that either gate or block valves be installed on both ends of the Model 100-01 Hytrol Valve to facilitate isolating the valve for preventive maintenance and repairs.
3. Place the valve in the line with flow through the valve in the direction indicated on the inlet nameplate. (See "Flow Direction" Section) **Note: Valve can be installed in the vertical or horizontal position.**
4. Allow sufficient room around valve to make adjustments and for disassembly.
5. Cla-Val Model 100-01 Hytrol Valves operate with maximum efficiency when mounted in horizontal piping with the cover UP, however, other positions are acceptable. Due to size and weight of the cover and internal components of 8 inch and larger valves, installation with the cover UP is advisable. This makes internal parts readily accessible for periodic inspection.
6. Caution must be taken in the installation of this valve to insure that galvanic and/or electrolytic action does not take place. The proper use of dielectric fittings and gaskets are required in all systems using dissimilar metals.
7. If a pilot control system is installed on the Model 100-01 Hytrol Valve, use care to prevent damage. If it is necessary to remove fittings or components, be sure they are kept clean and replaced exactly as they were.
8. After the valve is installed and the system is first pressurized, vent air from the cover chamber and pilot system tubing by loosening fittings at all high points.

Principles of Operation

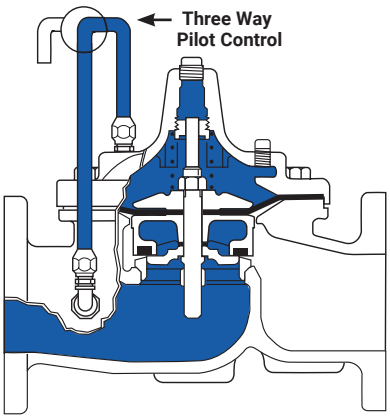

Tight Closing Operation
When pressure from the valve inlet (or an equivalent independent operating pressure) is applied to the diaphragm chamber the valve closes drip-tight.

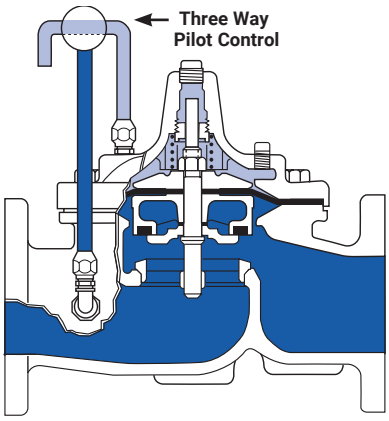

Full Open Operation
When pressure in diaphragm chamber is relieved to a zone of lower pressure (usually atmosphere) the line pressure (5 psi Min.) at the valve inlet opens the valve.

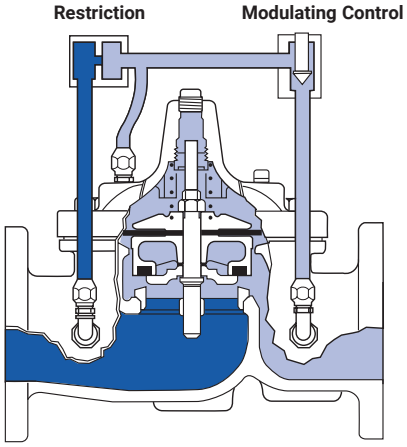

Modulating Action
Valve modulates when diaphragm pressure is held at an intermediate point between inlet and discharge pressure. With the use of a Cla-Val. "Modulating control," which reacts to line pressure changes, the pressure above the diaphragm is varied, allowing the valve to throttle and compensate for the change.

© Copyright CLA-VAL - Specifications subject to change without notice.

Flow Direction

The flow through the Model 100-01 Hytrol Valve can be in one of two directions. When flow is "up-and-over the seat," it is in "normal" flow and the valve will fail in the open position. When flow is "over-the seat-and down," it is in "reverse" flow and the valve will fail in the closed position. There are no permanent flow arrow markings. **The valve must be installed according to nameplate data.**

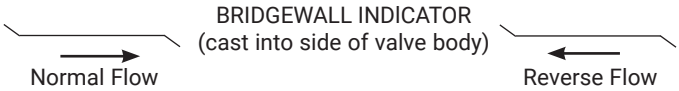

Recommended Tools

1. Three pressure gauges with ranges suitable to the installation to be put at Hytrol inlet, outlet and cover connections.
2. Cla-Val Model X101D Valve Position Indicator. This provides visual indication of valve position without disassembly of valve.
3. Other items are: suitable hand tools such as screwdrivers, wrenches, etc., soft jawed (brass or aluminum) vise, 400 grit wet or dry sandpaper and water for cleaning.

Troubleshooting

The following troubleshooting information deals strictly with the Model 100-01 Hytrol Valve. This assumes that all other components of the pilot control system have been checked out and are in proper working condition. (See appropriate sections in Technical Manual for complete valve).

All trouble shooting is possible without removing the valve from the line or removing the cover. It is highly recommended to permanently install a Model X101D Valve Position Indicator and three gauges in unused Hytrol inlet, outlet and cover connections.

After checking out probable causes and remedies, the following three checks can be used to diagnose the nature of the problem before maintenance is started. They must be done in the order shown.

Service Suggestions		
Symptom	Possible Cause	Solutions
Fails to Close	Closed isolation valves in control system, or in main line.	Open Isolation valves.
	Lack of cover chamber pressure	Check upstream pressure, pilot system, strainer, tubing, valves, or needle valves for obstruction.
	Diaphragm damaged. (See Diaphragm Check.)	Replace diaphragm.
	Diaphragm assembly inoperative. Corrosion or excessive scale build up on valve stem. (See Freedom of Movement Check)	Clean and polish stem. Inspect and replace any damaged or badly eroded part.
	Mechanical obstruction. Object lodged in valve.(See Freedom of Movement Check)	Remove obstruction.
	Worn disc. (See Tight Sealing Check)	Replace disc.
	Badly scored seat (See Tight Sealing Check)	Replace seat.
Fails to Open	Closed upstream and/or downstream isolation valves in main line.	Open isolation valves.
	Insufficient line pressure.	Check upstream pressure. (Minimum 5 psi flowing line pressure differential.)
	Diaphragm assembly inoperative. Corrosion or excessive buildup on valve stem. (See Freedom of Movement Check)	Clean and polish stem. Inspect and replace any damaged or badly eroded part.
	Diaphragm damaged. (For valves in "reverse flow" only)	Replace diaphragm.

Three Checks

The Model 100-01 Hytrol Valve has only one moving part (the diaphragm and disc assembly). So, there are only three major types of problems to be considered.

First: Valve is stuck - that is, the diaphragm assembly is not free to move through a full stroke either from open to close or vice versa.

Second: Valve is free to move and can't close because of a worn out diaphragm.

Third: Valve leaks even though it is free to move and the diaphragm isn't leaking.

CAUTION: Care should be taken when doing the troubleshooting checks on the Model 100-01 Hytrol Valve. These checks do require the valve to open fully. This will either allow a high flow rate through the valve, or the downstream pressure will quickly increase to the inlet pressure. In some cases,this can be very harmful. Where this is the case, and there are no block valves in the system to protect the downstream piping, it should be realized that **the valve cannot be serviced under pressure**. Steps should be taken to remedy this situation before proceeding any further.

© Copyright CLA-VAL - Specifications subject to change without notice.

DIAPHRAGM CHECK (#1)

1. Shut off pressure to the Hytrol Valve by slowly closing upstream and downstream isolation valves. **SEE CAUTION.**
2. Disconnect or close all pilot control lines to the valve cover and leave only one fitting in highest point of cover open to atmosphere.
3.With the cover vented to atmosphere, slowly open upstream isolation valve to allow some pressure into the Hytrol Valve body. Observe the open cover tapping for signs of continuous flow. It is not necessary to fully open isolating valve. Volume in cover chamber capacity chart will be displaced as valve moves to open position. Allow sufficient time for diaphragm assembly to shift positions. If there is no continuous flow, you can be quite certain the diaphragm is sound and the diaphragm assembly is tight. If the fluid appears to flow continuously this is a good reason to believe the diaphragm is either damaged or it is loose on the stem. In either case, this is sufficient cause to remove the valve cover and investigate the leakage. (See "Maintenance" section for procedure.)

Cover Chamber Capacity (Liquid Volume displaced when valve opens)		
Valve Size (Inches)	Displacement	
	Gallons	Liters
1-1/4"	0.020	0.07
1-1/2"	0.020	0.07
2"	0.032	0.12
2-1/2"	0.043	0.16
3"	0.080	0.30
4"	0.169	0.64
6"	0.531	2.0
8"	1.26	4.8
10"	2.51	9.5
12"	4.00	15.1
14"	6.50	24.6
16"	9.57	36.0
18"	11.00	41.6
20"	12.00	45.4
24"	29.00	109.8
30"	42.00	197.0
36"	90.00	340.0

FREEDOM OF MOVEMENT CHECK (#2)

4. Determining the Hytrol Valve's freedom of movement can be done by one of two methods.
5. For most valves it can be done after completing Diaphragm Check (Steps 1, 2, and 3). **SEE CAUTION**. At the end of step 3 the valve should be fully open.
6. If the valve has a Cla-Val X101D Position Indicator, observe the indicator to see that the valve opens wide. Mark the point of maximum opening.
7. Re-connect enough of the control system to permit the application of inlet pressure to the cover. Open pilot system cock so pressure flows from the inlet into the cover.
8. While pressure is building up in the cover, the valve should close smoothly. There is a hesitation in every Hytrol Valve closure, which can be mistaken for a mechanical bind. The stem will appear to stop moving very briefly before going to the closed position. This slight pause is caused by the diaphragm flexing at a particular point in the valve's travel and is not caused by a mechanical bind.
9. When closed, a mark should be made on the X101D Valve position indicator corresponding to the "closed" position. The distance between the two marks should be approximately the stem travel shown in chart.
10. If the stroke is different than that shown in stem travel chart this is a good reason to believe something is mechanically restricting the stroke of the valve at one end of its travel. If the flow does not stop through the valve when in the indicated "closed" position, the obstruction probably is between the disc and the seat. If the flow does stop, then the obstruction is more likely in the cover. In either case, the cover must be removed, and the obstruction located and removed. The stem should also be checked for scale build-up. (See "Maintenance" section for procedure.)

Stem Travel (Fully open to fully closed)			
Valve Size (Inches)		Travel (Inches)	
Inches	MM	Inches	MM
1-1/4"	32	0.04"	10
1-1/2"	40	0.04"	10
2"	50	0.06"	15
2-1/2"	65	0.07"	18
3"	80	0.08"	20
4"	100	1.1"	28
6"	150	1.7"	43
8"	200	2.3"	58
10"	250	2.8"	71
12"	300	3.4"	86
14"	350	4.0"	100
16"	400	4.5"	114
18"	450	5.1"	130
20"	500	5.6"	143
24"	600	6.7"	165
30"	800	7.5"	190
36"	900	8.5"	216

11. For valves 6" and smaller, the Hytrol Valve's freedom of movement check can also be done after all pressure is removed from the valve. **SEE CAUTION.** After closing inlet and outlet isolation valves and bleeding pressure from the valve, check that the cover chamber and the body are temporarily vented to atmosphere. Insert fabricated tool into threaded hole in top of valve stem, and lift the diaphragm assembly manually. Note any roughness. The diaphragm assembly should move smoothly throughout entire valve stroke. The tool is fabricated from rod that is threaded on one end to fit valve stem and has a "T" bar handle of some kind on the other end for easy gripping. (See chart in Step 4 of "Disassembly" Section.)
12. Place marks on this diaphragm assembly lifting tool when the valve is closed and when manually positioned open. The distance between the two marks should be approximately the stem travel shown in stem travel chart. If the stroke is different than that shown, there is a good reason to believe something is mechanically restricting the stroke of the valve. The cover must be removed, and the obstruction located and removed. The stem should also be checked for scale build-up. (See "Maintenance" section for procedure.)

TIGHT SEALING CHECK (#3)

13. Test for seat leakage after completing checks #1 & #2 (Steps 1 to 12). **SEE CAUTION**. Close the isolation valve downstream of the Hytrol Valve. Apply inlet pressure to the cover of the valve, wait until it closes. Install a pressure gauge between the two closed valves using one of the two ports in the outlet side of the Hytrol. Watch the pressure gauge. If the pressure begins to climb, then either the downstream isolation valve is permitting pressure to creep back, or the Hytrol is allowing pressure to go through it. Usually the pressure at the Hytrol inlet will be higher than on the isolation valve discharge, so if the pressure goes up to the inlet pressure, you can be sure the Hytrol is leaking. Install another gauge downstream of isolating valve. If the pressure between the valves only goes up to the pressure on the isolation valve discharge, the Hytrol Valve is holding tight, and it was just the isolation valve leaking.

© Copyright CLA-VAL - Specifications subject to change without notice.

Maintenance

PREVENTATIVE MAINTENANCE

The Cla-Val Model 100-01 Hytrol Valve requires no lubrication or packing and a minimum of maintenance. However, a periodic inspection schedule should be established to determine how the operating conditions of the system are affecting the valve. The effect of these actions must be determined by inspection.

DISASSEMBLY

Inspection or maintenance can be accomplished without removing the valve from the line. Repair kits with new diaphragm and disc are recommended to be on hand before work begins.

WARNING: Maintenance personnel can be injured and equipment damaged if disassembly is attempted with pressure in the valve. **SEE CAUTION.**

1. Close upstream and downstream isolation valves and **independent operating pressure when used** to shut off all pressure to the valve.
2. Loosen tube fittings in the pilot system to remove pressure from valve body and cover chamber. After pressure has been released from the valve, use care to remove the controls and tubing. Note and sketch position of tubing and controls for re-assembly. The schematic in front of the Technical Manual can be used as a guide when reassembling pilot system.
3. Remove cover nuts and remove cover. If the valve has been in service for any length of time, chances are the cover will have to be loosened by driving upward along the edge of the cover with a **dull** cold chisel.

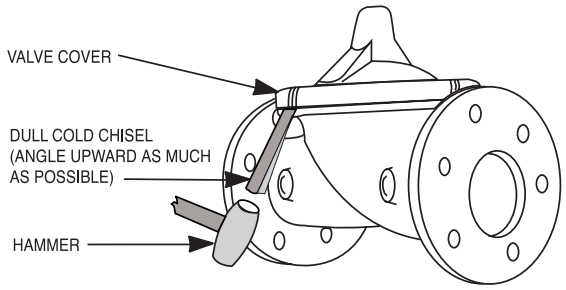

On 6” and smaller valves block and tackle or a power hoist can be used to lift valve cover by inserting proper size eye bolt in place of the center cover plug. on 8” and larger valves there are 4 holes (5/8” — 11 size) where jacking screws and/or eye bolts may be inserted for lifting purposes. **Pull cover straight up** to keep from damaging the integral seat bearing and stem.

Cover Center Plug Size	
Valve Size (Inches)	Thread Size (NPT)
1-1/4” - 1-1/2”	1/4”
2” - 3”	1/2”
4” - 6”	3/4”
8” - 10”	1”
12”	1-1/4”
14”	1-1/2”
16”	2”
18” - 24”	1”
30” & 36”	2”

4. Remove the diaphragm and disc assembly from the valve body. With smaller valves this can be accomplished by hand by **pulling straight up on the stem so as not to damage the seat bearing.** On large valves, an eye bolt of proper size can be installed in the stem and the diaphragm assembly can be then lifted with a block and tackle or power hoist. Take care not to damage the stem or bearings. The valve won’t work if these are damaged.

Valve Stem Thread Size	
Valve Size (Inches)	Thread Size (UNF Internal)
1-1/4” - 2-1/2”	10 - 32
3” - 4”	1/4 - 28
6” - 14”	3/8 - 24
16”	1/2 - 20
18”	3/4 - 16
20”	3/4 - 16
24”	3/4 - 16
30”	3/4 - 16
36”	3/4 - 16

5. The next item to remove is the stem nut. Examine the stem threads above the nut for signs of mineral deposits or corrosion. If the threads are not clean, use a wire brush to remove as much of the residue as possible. Attach a good fitting wrench to the nut and give it a sharp “rap” rather than a steady pull. Usually several blows are sufficient to loosen the nut for further removal. On the smaller valves, the entire diaphragm assembly can be held by the stem in a vise **equipped with soft brass jaws** before removing the stem nut.

The use of a pipe wrench or a vise without soft brass jaws scars the fine finish on the stem. No amount of careful dressing can restore the stem to its original condition. Damage to the finish of the stem can cause the stem to bind in the bearings and the valve will not open or close.

6. After the stem nut has been removed, the diaphragm assembly breaks down into its component parts. Removal of the disc from the disc retainer can be a problem if the valve has been in service for a long time. Using two screwdrivers inserted along the outside edge of the disc usually will accomplish its removal. Care should be taken to preserve the spacer washers in water, particularly if no new ones are available for re-assembly.
7. The only part left in the valve body is the seat which ordinarily does not require removal. Careful cleaning and polishing of inside and outside surfaces with 400 wet/dry sandpaper will usually restore the seat’s sharp edge. If, however, it is badly worn and replacement is necessary, it can be easily removed.

Seats in valve sizes 1 1/4” through 6” are threaded into the valve body. They can be removed with accessory X109 Seat Removing Tool available from the factory. On 8” and larger valves, the seat is held in place by flat head machine screws. Use a tight-fitting, long shank screwdriver to prevent damage to seat screws. If upon removal of the screws the seat cannot be lifted out, it will be necessary to use a piece of angle or channel iron with a hole drilled in the center. Place it across the body so a long stud can be inserted through the center hole in the seat and the hole in the angle iron. By tightening the nut a uniform upward force is exerted on the seat for removal.

NOTE: Do not lift up on the end of the angle iron as this may force the integral bearing out of alignment, causing the stem to bind.

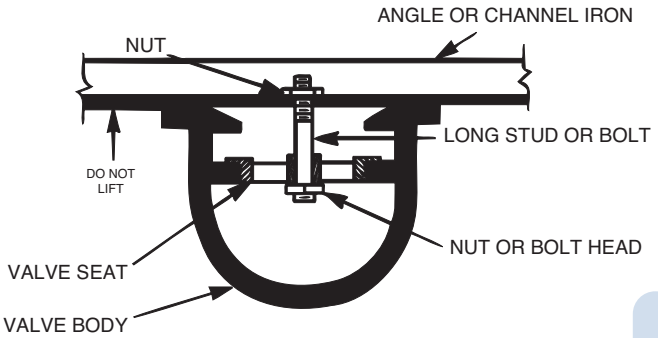

© Copyright CLA-VAL - Specifications subject to change without notice.

Lime Deposits

One of the easiest ways to remove lime deposits from the valve stem or other metal parts is to dip them in a 5-percent muriatic acid solution just long enough for the deposit to dissolve. This will remove most of the common types of deposits. **CAUTION: USE EXTREME CARE WHEN HANDLING ACID.** Rinse parts in water before handling. If the deposit is not removed by acid, then a fine grit (400) wet or dry sandpaper can be used with water.

Inspection of Parts

After the valve has been disassembled, each part should be examined carefully for signs of wear, corrosion, or any other abnormal condition. Usually, it is a good idea to replace the rubber parts (diaphragm and disc) unless they are free of signs of wear. These are available in a repair kit. Any other parts which appear doubtful should be replaced. WHEN ORDERING PARTS, BE SURE TO GIVE COMPLETE NAMEPLATE DATA, ITEM NUMBER AND DESCRIPTION.

NOTE: If a new disc isn't available, the existing disc can be turned over, exposing the unused surface for contact with the seat. The disc should be replaced as soon as practical.

Reassembly

1. Reassembly is the reverse of the disassembly procedure. If a new disc has been installed, it may require a different number of spacer washers to obtain the right amount of "grip" on the disc. When the diaphragm assembly has been tightened to a point where the diaphragm cannot be twisted, the disc should be compressed very slightly by the disc guide. Excessive compression should be avoided. Use just enough spacer washers to hold the disc firmly without noticeable compression.
2. **MAKE SURE THE STEM NUT IS VERY TIGHT**. Attach a good fitting wrench to the nut and give it a sharp "rap" rather than a steady pull. Usually several blows are sufficient to tighten the stem nut for final tightening. Failure to do so could allow the diaphragm to pull loose and tear when subjected to pressure.
3. Carefully install the diaphragm assembly by lowering the stem through the seat bearing. Take care not to damage the stem or bearing. Line up the diaphragm holes with the stud or bolt holes on the body. On larger valves with studs, it may be necessary to hold the diaphragm assembly up part way while putting the diaphragm over the studs.
4. Put spring in place and replace cover. Make sure diaphragm is lying smooth under the cover.
5. Tighten cover nuts firmly using a cross-over pattern until all nuts are tight.
6. Test Hytrol Valve before re-installing pilot valve system.

Test Procedure After Valve Assembly

There are a few simple tests which can be made in the field to make sure the Hytrol Valve has been assembled properly. Do these before installing pilot system and returning valve to service. These are similar to the three troubleshooting tests.

1. Check the diaphragm assembly for freedom of movement after all pressure is removed from the valve. **SEE CAUTION**. Insert fabricated tool into threaded hole in top of valve stem, and lift the diaphragm assembly manually. Note any roughness, sticking or grabbing. The diaphragm assembly should move smoothly throughout entire valve stroke. The tool is fabricated from rod that is threaded on one end to fit valve stem (See chart in Step 4 of "Disassembly" section.) and has a "T" Bar handle of some kind on the other end for easy gripping.

Place marks on this diaphragm assembly lifting tool when the valve is closed and when manually positioned open. The distance between the two marks should be approximately the stem travel shown in stem travel chart. (See "Freedom of Movement Check" section.) If the stroke is different than that shown, there is a good reason to believe something is mechanically restricting the stroke of the valve. The cover must be removed, the obstruction located and removed. (See "Maintenance" section for procedure.

Due to the weight of the diaphragm assembly this procedure is not possible on valves 8" and larger. on these valves, the same determination can be made by carefully introducing a low pressure-less than five psi) into the valve body with the cover vented. **SEE CAUTION**. Looking in cover center hole see the diaphragm assembly lift easily without hesitation, and then settle back easily when the pressure is removed.

2. To check the valve for drip-tight closure, a line should be connected from the inlet to the cover, and pressure applied at the inlet of the valve. If properly assembled, the valve should hold tight with as low as ten PSI at the inlet. See "Tight Sealing Check" section.)
3. With the line connected from the inlet to the cover, apply full working pressure to the inlet. Check all around the cover for any leaks. Re-tighten cover nuts if necessary to stop leaks past the diaphragm.
4. Remove pressure, then re-install the pilot system and tubing exactly as it was prior to removal. **Bleed air from all high points**.
5. Follow steps under "Start-Up and Adjustment" Section in Technical Manual for returning complete valve back to service.

© Copyright CLA-VAL - Specifications subject to change without notice.

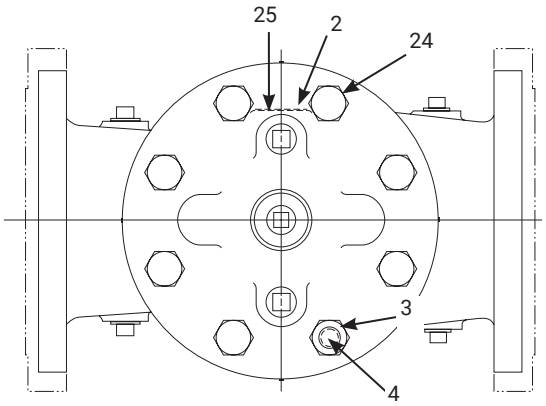

TOP VIEW

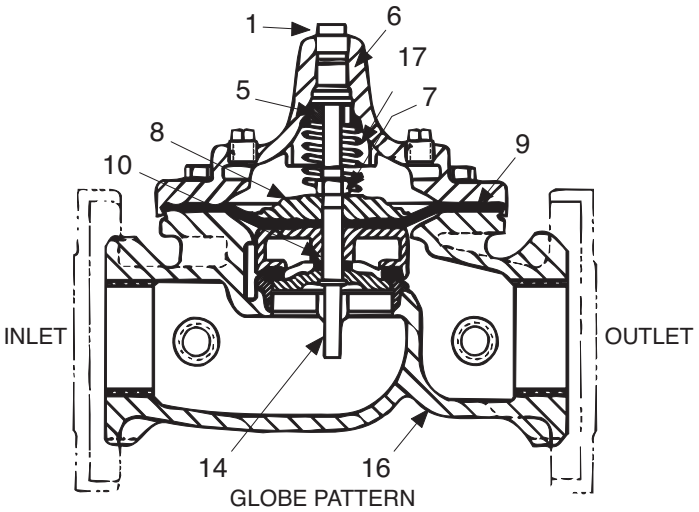

GLOBE PATTERN

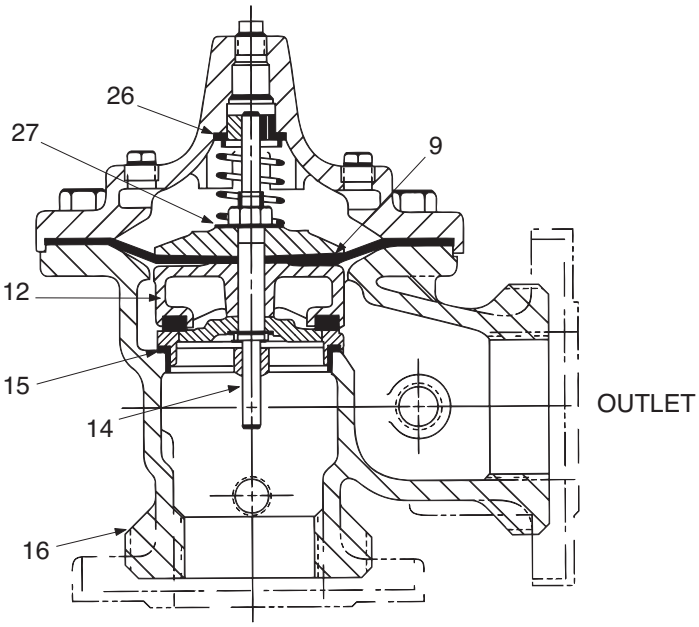

INLET
ANGLE PATTERN

Item No.	Description
1	Pipe Plug
2	Drive Screws (for nameplate)
3	Hex Nut (8” and larger)
4	Stud (8” and larger)
5	Cover Bearing
6	Cover
7	Stem Nut
8	Diaphragm Washer
9	Diaphragm
10	Spacer Washers
11	Disc Guide
12	Disc Retainer
13	Disc
14	Stem
15	Seat
16	Body
17	Spring
22	Flat Head Screws (8” and larger)
23	Seat O-Ring
24	Hex Head Bolt (1-1/4” thru 4”)
25	Nameplate
26	Upper Spring Washer (Epoxy coated valves only)
27	Lower Spring Washer (Epoxy coated valves only)
28	Cover Bearing Housing (16” only)
29	Cover O-Ring (16” only)
30	Hex Bolt (16” only)
31	Pipe Cap (16” only)

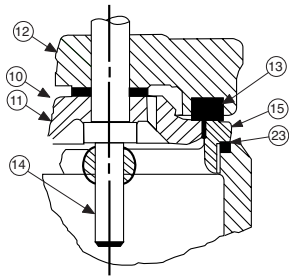

1-1/4" - 6" SEAT DETAIL

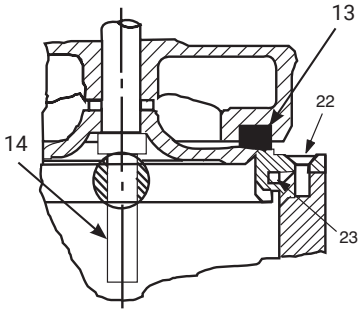

8" - 24" SEAT DETAIL

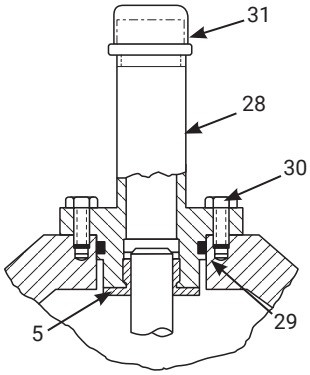

16" COVER DETAIL

© Copyright CLA-VAL - Specifications subject to change without notice.

Model 100-01

HYTROL VALVE SERVICE DATA

DESCRIPTION 100-01 HYTROL VALVE

The Cla-Val Model 100-01 Hytrol Valve is a main valve for Cla-Val Automatic Control Valves. It is a hydraulically operated, diaphragm-actuated, globe or angle pattern valve. This valve consists of three major components; body, diaphragm assembly, and cover. The diaphragm assembly is the only moving part. The diaphragm assembly uses a diaphragm of nylon fabric bonded with synthetic rubber. A synthetic rubber disc, contained on three and one half sides by a disc retainer and disc guide, forms a seal with the valve seat when pressure is applied above the diaphragm. The diaphragm assembly forms a sealed chamber in the upper portion of the valve, separating operating pressure from line pressure.

DESCRIPTION 100-20 600 SERIES HYTROL VALVE

The Cla-Val Model 100-20 Hytrol Valve (600 Series main valve) have only one part -the body- that is different from standard 100 Series Cla-Val main valve parts. The remaining parts of the 600 series main valve are standard Cla-Val main valve parts. All service and maintenance information for the standard 100 Series main valves also apply to the 600 series main valves. The most important thing to remember when ordering main valve repair kits and replacement parts, except for the body, all other parts are going to be for a smaller size main valve. Cla-Val identifies main valve parts with the flange size of the standard 100 Series main valve. Refer to the "Main Valve Sizes" chart below.

Hytrol Service Data

Hytrol Service Data

Hytrol Size				Stem Travel		Cover Capacity Displacement		Cover Center NPT	Cover Nut or Bolt (1)					Cover Lifting Holes	Valve Stem Internal Thread	Stem Nut (3)			
100-01		100-20							Thread	Socket	Qty	Torque, Lubricated (2)				Thread	Socket (Long)	Torque, Lubricated (2)	
IN	MM	IN	MM	IN	MM	Gallons	Liters					FT. LBS	IN. LBS					FT. LBS	IN. LBS
1	25	—	—	0.24	6	0.02	—	1/4	1/4 – 20	7/16	8	—	80	—	—	3/8 – 24	9/16	—	80
1 1/4	32	—	—	0.49	12	0.02	0.08	1/4	5/16 – 18	1/2	8	12	—	—	#10 – 32	7/16 – 20	11/16	12	—
1 1/2	40	—	—	0.49	12	0.02	0.08	1/4	5/16 – 18	1/2	8	12	—	—	#10 – 32	7/16 – 20	11/16	12	—
2	50	3	80	0.59	15	0.03	0.12	1/2	3/8 – 16	9/16	8	20	—	—	#10 – 32	1/2 – 20	3/4	16	—
2 1/2	65	—	—	0.71	18	0.04	0.16	1/2	7/16 – 14	5/8	8	36	—	—	#10 – 32	5/8 – 18	15/16	32	—
3	80	4	—	0.84	21	0.08	0.3	1/2	1/2 – 13	3/4	8	50	—	—	1/4 – 28	5/8 – 18	15/16	32	—
4	100	6	—	1.09	28	0.17	0.64	3/4	3/4 – 10	1 1/8	8	125	—	—	1/4 – 28	3/4 – 16	1 1/8	55	—
6	150	8	—	1.58	40	0.53	2.01	3/4	3/4 – 10	1 1/8	12	125	—	—	3/8 – 24	7/8 – 14	1 5/16	100	—
8	200	10	—	2.24	57	1.26	4.77	1	3/4 – 10	1 1/4	16	125	—	5/8 – 11	3/8 – 24	1 1/8 – 12	1 3/4	180	—
10	250	12	—	2.71	69	2.51	9.5	1	7/8 – 9	1 7/16	20	160	—	3/4 – 10	3/8 – 24	1 1/4 – 12	1 7/8	300	—
12	300	14, 16	350, 400	3.34	85	4.00	15.14	1 1/4	1 1/8 – 7	1 13/16	20	320	—	3/4 – 10	3/8 – 24	1 1/2 – 12	2 1/4	500	—
14	350	—	—	4.08	104	6.50	24.61	1 1/2	1 1/4 – 7	2	20	450	—	1 – 8	3/8 – 24	1 1/2 – 12	2 1/4	500	—
16	400	18, 20, 24	450, 500, 600	4.58	116	9.60	36.34	2	1 1/4 – 7	2	20	450	—	1 – 8	1/2 – 20	2 – 16	3	600	—
18	500	—	—	5.13	130	11.00	42	1	1 1/4 – 7	2	24	450	—	1 – 8	3/4 – 16	2 1/4 – 16	3 7/16	1000	—
20	500	—	—	5.63	143	12.00	45.42	1	1 3/8 – 6	2 3/16	24	600	—	1 – 8	3/4 – 16	2 1/4 – 16	3 7/16	1000	—
24	600	30	—	6.50	165	29.00	109.78	1	1 1/2 – 12	2 3/8	24	850	—	1 1/8 – 7	3/4 – 16	3 – 12	4 5/8	1600	—
30	750	36	900	8.00	203	42.00	158.99	2	1 1/2 – 12	2 3/8	32	850	—	1 1/8 – 7	3/4 – 16	3 – 12	4 5/8	3000	—
36	900	42, 48, 56	1050, 1200, 1400	8.71	221	90.00	340.69	2	1 3/4 – 10	2 3/4	36	1250	—	1 1/4 – 12	3/4 – 16	3 1/2 – 8	6	3000	—

(1) Valve sizes 6" and smaller use hex bolts for cover fasteners. Valve sizes 8" and larger use studs with hex nuts.
(2) Clean all threads and apply anti-seize prior to reassembly of threaded fasteners. Torque values are based on standard SST material.
(3) Only stem nuts supplied by CLA-VAL shall be used.

© Copyright CLA-VAL - Specifications subject to change without notice.

Bolt/Nut Torquing Procedures on Valve Covers

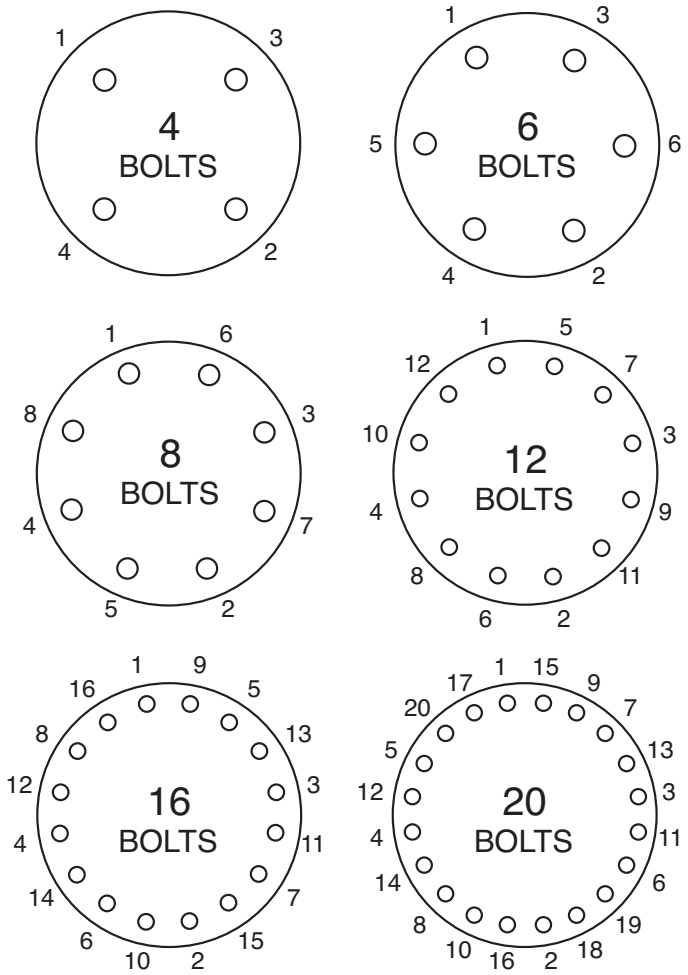

Follow this procedure when reassembling Main Valve:
1. Tightens bolts/nuts in a “Star” or “Cross-Over” pattern following the numbers shown above to insure that cover seats evenly on the diaphragm material and body.

2. Torque the bolt/nuts in three stages with a “Star” or “Cross-Over” pattern for each stage:
   A To approximately 10% of final torque.
   B. To approximately 75% of final torque.
   C. To final required torque.

3. Valves that are to be tested to 375 PSI or higher should be re-torqued after 24 hours.

100-01 Hytrol Main Valve Assembly

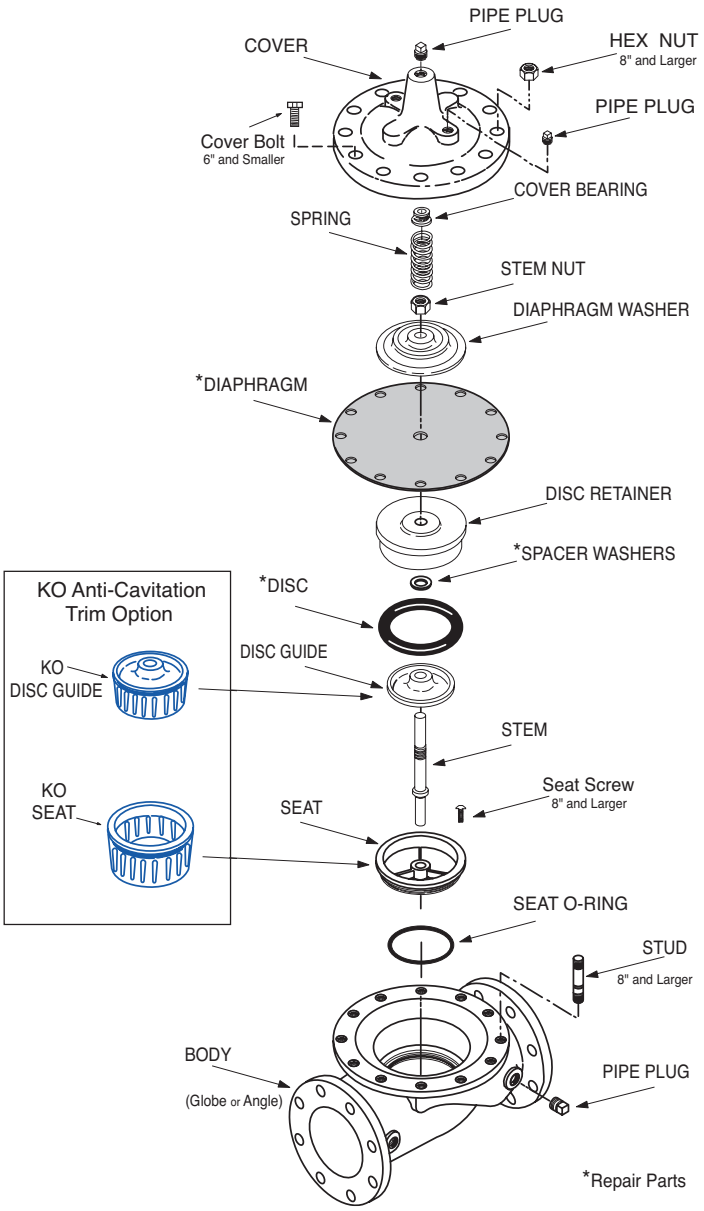

© Copyright CLA-VAL - Specifications subject to change without notice.

Model 100-20

(Reduced Internal Port)

600 SERIES HYTROL VALVE

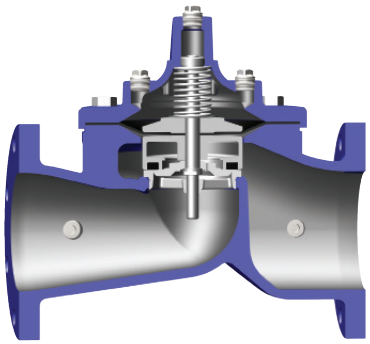

SERVICE AND MAINTENANCE OF 600 SERIES VALVES

The 600 series main valves have only one part -the body- that is different from standard 100 Series Cla-Val main valve parts. The remaining parts of the 600 series main valve are standard Cla-Val main valve parts.

The most important thing to remember when ordering main valve repair kits and replacement parts, except for the body, all other parts are going to be for a smaller size main valve. Cla-Val identifies main valve parts with the flange size of the standard 100 Series main valve. Refer to the "Main Valve Sizes Comparison" chart. For example, if you are servicing a 6" Model 100-20 Hytrol and needed a repair kit, you would order a repair kit for a 4" 100-01 Hytrol. This kit is also suitable for a 6" Model 100-20 Hytrol. Complete Technical Manuals include a repair kit data sheet N-RK that shows this relationship.

When you order repair parts, it is a good idea to include valve nameplate data (size, catalog number, and part number) and description of the parts desired. Do this to be sure parts will fit the valve you are working on and not be too big for it. Pilot controls and repair kits maintenance information remain the same for 100 or 600 Series valves.

UNDERSTANDING THE 600 SERIES VALVES

In 1987, Cla-Val introduced the Model 100-20 Hytrol as the basic main valve for the 600 Series of automatic control valves. To identify all new valves using the Model 100-20 Hytrol, an existing catalog number is modified. Making a 600 Series catalog number is simply done by using a "6" in front of the two digit catalog numbers or replacing the "2" with a "6" in three digit catalog numbers. Current schematics reflect both catalog numbers together separated by a slash (i.e. - Model 90-01/690-01, 58-02/658-02, 210-01/610-01, etc). Since these two valves 'share' the same catalog number and schematic, they provide the same function in a system. The only difference between the two valves is the relative capacity of the two main valve series.

The Model 100-01 Hytrol is the basic main valve for Cla-Val automatic control valves. This valve is the current version of the Clayton Hytrol valve design originated in 1936. The 100-01 Hytrol is designed as a full flow area valve. This means that the inlet, seat and outlet openings are the same size. Thus, the pressure drop is kept to a minimum for this globe style design.

The Model 100-20 Hytrol valve has all of the basic features and advantages of the original Model 100-01 Hytrol. Only one part has been changed - the body. It is designed with different size inlet, seat and outlet openings. The Model 100-20 Hytrol has inlet and outlet flanges one valve size larger than the seat opening size. This results in what is sometimes called a "reduced port' main valve. For example, a 4" Model 100-20 valve has a 3" seat. Note: valve size is always determined by the flange size. The following chart compares the Model 100-01 and the Model 100-20 main valves.

Basic Main valve Size Comparison		
Globe Pattern Valves		
Flange Size (inch)	Seat Size	
	Model 100-01 (100 Series)	Model 100-20 (600 Series)
3	3	2
4	4	3
6	6	4
8	8	6
10	10	8
12	12	10
14	14	12
16	16	12
18	18	16
20	20	16
24	24	16
30	30	24
36	36	30
42	-	36
48	-	36
Angle Pattern Valves		
Flange Size (inch)	Seat Size	
	Model 100-01 (100 Series)	Model 100-20 (600 Series)
4	4	3
6	6	4
8	8	6

The Model 100-20 Hytrol is available only in ductile iron, 150 and 300 pressure class, and Bronze trim standard. Available extra cost main valve options include stainless steel trim, epoxy coating, Dura-Kleen stem, Delrin sleeved stem, and high temperature rubber parts. All four basic main valves have a 600 Series version available with all of the same benefits and size relationships. The following chart shows the relationship of Cla-Val main valve catalog numbers.

Cla-Val Main valve			
Catalog Name	Catalog Number		
	Circa 1936	100 Series	600 Series
Hytrol	100 (Angle =2100)	100-01	100-20
Powertrol	100P & 100PA	100-02	100-21
Powercheck	100PC & 100PCA	100-03	100-22
Hycheck	181	100-04	100-23

© Copyright CLA-VAL - Specifications subject to change without notice.

Installation

1. Before valve is installed, pipe lines should be flushed of all chips, scale and foreign matter.

2. It is recommended that either gate or block valves be installed on both ends of the Model 100-20 Hytrol Valve to facilitate isolating the valve for preventive maintenance and repairs.

3. Place the valve in the line with flow through the valve in the direction indicated on the inlet nameplate. (See "Flow Direction" Section)

4. Allow sufficient room around valve to make adjustments and for disassembly.

5. Cla-Val Model 100-20 Hytrol Valves operate with maximum efficiency when mounted in horizontal piping with the cover UP, however, other positions are acceptable. Due to size and weight of the cover and internal components of 8 inch and larger valves, installation with the cover UP is advisable. This makes internal parts readily accessible for periodic inspection.

6. Caution must be taken in the installation of this valve to insure that galvanic and/or electrolytic action does not take place. The proper use of dielectric fittings and gaskets are required in all systems using dissimilar metals.

7. If a pilot control system is installed on the Model 100-20 Hytrol Valve, use care to prevent damage. If it is necessary to remove fittings or components, be sure they are kept clean and replaced exactly as they were.

8. After the valve is installed and the system is first pressurized, vent air from the cover chamber and pilot system tubing by loosening fittings at all high points.

Principles of Operation

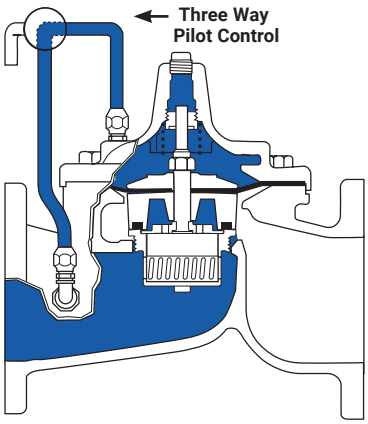

Tight Closing Operation
When pressure from the valve inlet (or an equivalent independent operating pressure) is applied to the diaphragm chamber the valve closes drip-tight.

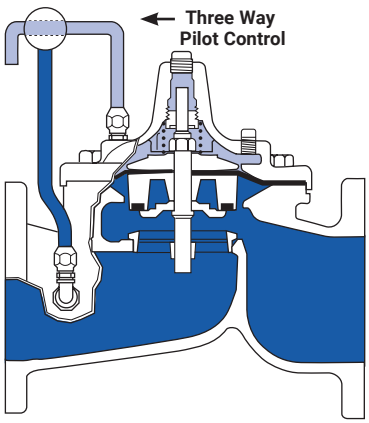

Full Open Operation
When pressure in diaphragm chamber is relieved to a zone of lower pressure (usually atmosphere) the line pressure (5 psi Min.) at the valve inlet opens the valve.

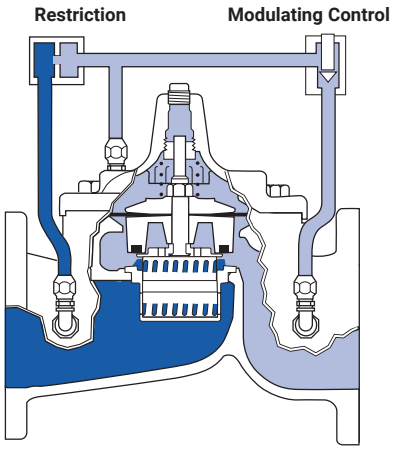

Modulating Action
Valve modulates when diaphragm pressure is held at an intermediate point between inlet and discharge pressure. With the use of a Cla-Val. "Modulating control," which reacts to line pressure changes, the pressure above the diaphragm is varied, allowing the valve to throttle and compensate for the change.

Flow Direction

The flow through the Model 100-20 Hytrol Valve can be in one of two directions. When flow is "up-and-over the seat," it is in "normal" flow and the valve will fail in the open position. When flow is "over-the seat-and down," it is in "reverse" flow and the valve will fail in the closed position. There are no permanent flow arrow markings. **The valve must be installed according to nameplate data.**

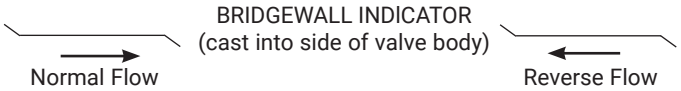

Recommended Tools

1. Three pressure gauges with ranges suitable to the installation to be put at Hytrol inlet, outlet and cover connections.

2. Cla-Val Model X101D Valve Position Indicator. This provides visual indication of valve position without disassembly of valve.

3. Other items are: suitable hand tools such as screwdrivers, wrenches, etc., soft jawed (brass or aluminum) vise, 400 grit wet or dry sandpaper and water for cleaning.

© Copyright CLA-VAL - Specifications subject to change without notice.

Troubleshooting

The following troubleshooting information deals strictly with the Model 100-20 Hytrol Valve. This assumes that all other components of the pilot control system have been checked out and are in proper working condition. (See appropriate sections in Technical Manual for complete valve).

All trouble shooting is possible without removing the valve from the line or removing the cover. It is highly recommended to permanently install a Model X101D Valve Position Indicator and three gauges in unused Hytrol inlet, outlet and cover connections.

After checking out probable causes and remedies, the following three checks can be used to diagnose the nature of the problem before maintenance is started. They must be done in the order shown.

Service Suggestions		
Symptom	Possible Cause	Solutions
Fails to Close	Closed isolation valves in control system, or in main line.	Open Isolation valves.
	Lack of cover chamber pressure	Check upstream pressure, pilot system, strainer, tubing, valves, or needle valves for obstruction.
	Diaphragm damaged. (See Diaphragm Check.)	Replace diaphragm.
	Diaphragm assembly inoperative. Corrosion or excessive scale build up on valve stem. (See Freedom of Movement Check)	Clean and polish stem. Inspect and replace any damaged or badly eroded part.
	Mechanical obstruction. Object lodged in valve.(See Freedom of Movement Check)	Remove obstruction.
	Worn disc. (See Tight Sealing Check)	Replace disc.
	Badly scored seat (See Tight Sealing Check)	Replace seat.
Fails to Open	Closed upstream and/or downstream isolation valves in main line.	Open isolation valves.
	Insufficient line pressure.	Check upstream pressure. (Minimum 5 psi flowing line pressure differential.)
	Diaphragm assembly inoperative. Corrosion or excessive buildup on valve stem. (See Freedom of Movement Check)	Clean and polish stem. Inspect and replace any damaged or badly eroded part.
	Diaphragm damaged. (For valves in “reverse flow” only)	Replace diaphragm.

Three Checks

The Model 100-20 Hytrol Valve has only one moving part (the diaphragm and disc assembly). So, there are only three major types of problems to be considered.

First: Valve is stuck - that is, the diaphragm assembly is not free to move through a full stroke either from open to close or vice versa.

Second: Valve is free to move and can’t close because of a worn out diaphragm.

Third: Valve leaks even though it is free to move and the diaphragm isn’t leaking.

CAUTION: Care should be taken when doing the troubleshooting checks on the Model 100-20 Hytrol Valve. These checks do require the valve to open fully. This will either allow a high flow rate through the valve, or the downstream pressure will quickly increase to the inlet pressure. In some cases,this can be very harmful. Where this is the case, and there are no block valves in the system to protect the downstream piping, it should be realized that **the valve cannot be serviced under pressure**. Steps should be taken to remedy this situation before proceeding any further.

© Copyright CLA-VAL - Specifications subject to change without notice.

DIAPHRAGM CHECK (#1)

1. Shut off pressure to the Hytrol Valve by slowly closing upstream and downstream isolation valves. **SEE CAUTION.**
2. Disconnect or close all pilot control lines to the valve cover and leave only one fitting in highest point of cover open to atmosphere.
3.With the cover vented to atmosphere, slowly open upstream isolation valve to allow some pressure into the Hytrol Valve body. Observe the open cover tapping for signs of continuous flow. It is not necessary to fully open isolating valve. Volume in cover chamber capacity chart will be displaced as valve moves to open position. Allow sufficient time for diaphragm assembly to shift positions. If there is no continuous flow, you can be quite certain the diaphragm is sound and the diaphragm assembly is tight. If the fluid appears to flow continuously this is a good reason to believe the diaphragm is either damaged or it is loose on the stem. In either case, this is sufficient cause to remove the valve cover and investigate the leakage. (See "Maintenance" section for procedure.)

Cover Chamber Capacity		
Valve Size	Displacement	
Inches	Gallons	Liters
3"	0.032	0.12
4"	0.080	0.30
6"	0.169	0.64
8"	0.531	2.00
10"	1.26	4.80
12"	2.51	9.50
14"	4.00	15.10
16"	4.00	15.10
18"	9.60	36.20
20"	9.60	36.20
24"	9.60	36.20
30"	29.00	110
36"	42.00	197
42"	90.00	340
48"	90.00	340

FREEDOM OF MOVEMENT CHECK (#2)

4. Determining the Hytrol Valve's freedom of movement can be done by one of two methods.
5. For most valves it can be done after completing Diaphragm Check (Steps 1, 2, and 3). **SEE CAUTION**. At the end of step 3 the valve should be fully open.
6. If the valve has a Cla-Val X101D Position Indicator, observe the indicator to see that the valve opens wide. Mark the point of maximum opening.
7. Re-connect enough of the control system to permit the application of inlet pressure to the cover. Open pilot system cock so pressure flows from the inlet into the cover.
8. While pressure is building up in the cover, the valve should close smoothly. There is a hesitation in every Hytrol Valve closure, which can be mistaken for a mechanical bind. The stem will appear to stop moving very briefly before going to the closed position. This slight pause is caused by the diaphragm flexing at a particular point in the valve's travel and is not caused by a mechanical bind.
9. When closed, a mark should be made on the X101D Valve position indicator corresponding to the "closed" position. The distance between the two marks should be approximately the stem travel shown in chart.
10. If the stroke is different than that shown in stem travel chart this is a good reason to believe something is mechanically restricting the stroke of the valve at one end of its travel. If the flow does not stop through the valve when in the indicated "closed" position, the obstruction probably is between the disc and the seat. If the flow does stop, then the obstruction is more likely in the cover. In either case, the cover must be removed, and the obstruction located and removed. The stem should also be checked for scale build-up. (See "Maintenance" section for procedure.)

Stem Travel (Fully open to fully closed)			
Valve Size		Travel	
Inches	MM	Inches	MM
3"	80	0.7"	18
4"	100	0.8"	20
6"	150	1.1"	28
8"	200	1.7"	43
10"	250	2.3"	58
12"	300	2.8"	71
14"	350	3.4"	71
16"	400	4.0"	86
18"	460	4.5"	86
20"	500	5.1"	114
24"	600	5.6"	143
30"	800	6.7"	165
36"	900	7.5"	191
42"	1000	8.5"	216
48"	1200	8.5"	216

11. For valves 6" and smaller, the Hytrol Valve's freedom of movement check can also be done after all pressure is removed from the valve. **SEE CAUTION.** After closing inlet and outlet isolation valves and bleeding pressure from the valve, check that the cover chamber and the body are temporarily vented to atmosphere. Insert fabricated tool into threaded hole in top of valve stem, and lift the diaphragm assembly manually. Note any roughness. The diaphragm assembly should move smoothly throughout entire valve stroke. The tool is fabricated from rod that is threaded on one end to fit valve stem and has a "T" bar handle of some kind on the other end for easy gripping. (See chart in Step 4 of "Disassembly" Section.)
12. Place marks on this diaphragm assembly lifting tool when the valve is closed and when manually positioned open. The distance between the two marks should be approximately the stem travel shown in stem travel chart. If the stroke is different than that shown, there is a good reason to believe something is mechanically restricting the stroke of the valve. The cover must be removed, and the obstruction located and removed. The stem should also be checked for scale build-up. (See "Maintenance" section for procedure.)

TIGHT SEALING CHECK (#3)

13. Test for seat leakage after completing checks #1 & #2 (Steps 1 to 12). **SEE CAUTION**. Close the isolation valve downstream of the Hytrol Valve. Apply inlet pressure to the cover of the valve, wait until it closes. Install a pressure gauge between the two closed valves using one of the two ports in the outlet side of the Hytrol. Watch the pressure gauge. If the pressure begins to climb, then either the downstream isolation valve is permitting pressure to creep back, or the Hytrol is allowing pressure to go through it. Usually the pressure at the Hytrol inlet will be higher than on the isolation valve discharge, so if the pressure goes up to the inlet pressure, you can be sure the Hytrol is leaking. Install another gauge downstream of isolating valve. If the pressure between the valves only goes up to the pressure on the isolation valve discharge, the Hytrol Valve is holding tight, and it was just the isolation valve leaking.

© Copyright CLA-VAL - Specifications subject to change without notice.

Maintenance

PREVENTATIVE MAINTENANCE

The Cla-Val Model 100-20 Hytrol Valve requires no lubrication or packing and a minimum of maintenance. However, a periodic inspection schedule should be established to determine how the operating conditions of the system are affecting the valve. The effect of these actions must be determined by inspection.

DISASSEMBLY

Inspection or maintenance can be accomplished without removing the valve from the line. Repair kits with new diaphragm and disc are recommended to be on hand before work begins.

WARNING: Maintenance personnel can be injured and equipment damaged if disassembly is attempted with pressure in the valve. **SEE CAUTION.**

1. Close upstream and downstream isolation valves and **independent operating pressure when used** to shut off all pressure to the valve.
2. Loosen tube fittings in the pilot system to remove pressure from valve body and cover chamber. After pressure has been released from the valve, use care to remove the controls and tubing. Note and sketch position of tubing and controls for re-assembly. The schematic in front of the Technical Manual can be used as a guide when reassembling pilot system.
3. Remove cover nuts and remove cover. If the valve has been in service for any length of time, chances are the cover will have to be loosened by driving upward along the edge of the cover with a **dull** cold chisel.

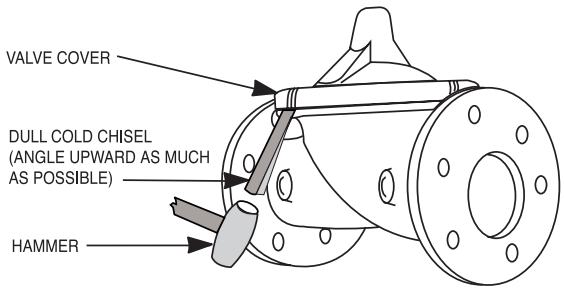

On 6” and smaller valves block and tackle or a power hoist can be used to lift valve cover by inserting proper size eye bolt in place of the center cover plug. On 8” and larger valves there are 4 holes (5/8” — 11 size) where jacking screws and/or eye bolts may be inserted for lifting purposes. **Pull cover straight up** to keep from damaging the integral seat bearing and stem.

Cover Center Plug Size	
Valve Size (Inches)	Thread Size (NPT)
3”	1/2”
4” - 6”	3/4”
8” - 10”	1”
12”	1-1/4”
14”	1-1/2”
16” -18”	2”
20” - 24”	2”
30” & 36”	2”
42” & 48”	2”

4. Remove the diaphragm and disc assembly from the valve body. With smaller valves this can be accomplished by hand by **pulling straight up on the stem so as not to damage the seat bearing.** On large valves, an eye bolt of proper size can be installed in the stem and the diaphragm assembly can be then lifted with a block and tackle or power hoist. Take care not to damage the stem or bearings. The valve won’t work if these are damaged.

Valve Stem Thread Size	
Valve Size (Inches)	Thread Size (UNF Internal)
3” - 4”	1/4 - 28
6” - 14”	3/8 - 24
16” - 18”	1/2 - 20
20”	3/4 - 16
24”	3/4 - 16
30”	3/4 - 16
36”	3/4 - 16
42”	3/4 - 16
48”	3/4 - 16

5. The next item to remove is the stem nut. Examine the stem threads above the nut for signs of mineral deposits or corrosion. If the threads are not clean, use a wire brush to remove as much of the residue as possible. Attach a good fitting wrench to the nut and give it a sharp “rap” rather than a steady pull. Usually several blows are sufficient to loosen the nut for further removal. On the smaller valves, the entire diaphragm assembly can be held by the stem in a vise **equipped with soft brass jaws** before removing the stem nut.

The use of a pipe wrench or a vise without soft brass jaws scars the fine finish on the stem. No amount of careful dressing can restore the stem to its original condition. Damage to the finish of the stem can cause the stem to bind in the bearings and the valve will not open or close.

6. After the stem nut has been removed, the diaphragm assembly breaks down into its component parts. Removal of the disc from the disc retainer can be a problem if the valve has been in service for a long time. Using two screwdrivers inserted along the outside edge of the disc usually will accomplish its removal. Care should be taken to preserve the spacer washers in water, particularly if no new ones are available for re-assembly.
7. The only part left in the valve body is the seat which ordinarily does not require removal. Careful cleaning and polishing of inside and outside surfaces with 400 wet/dry sandpaper will usually restore the seat’s sharp edge. If, however, it is badly worn and replacement is necessary, it can be easily removed.

Seats in valve sizes 1 1/4” through 6” are threaded into the valve body. They can be removed with accessory X109 Seat Removing Tool available from the factory. On 8” and larger valves, the seat is held in place by flat head machine screws. Use a tight-fitting, long shank screwdriver to prevent damage to seat screws. If upon removal of the screws the seat cannot be lifted out, it will be necessary to use a piece of angle or channel iron with a hole drilled in the center. Place it across the body so a long stud can be inserted through the center hole in the seat and the hole in the angle iron. By tightening the nut a uniform upward force is exerted on the seat for removal.

NOTE: Do not lift up on the end of the angle iron as this may force the integral bearing out of alignment, causing the stem to bind.

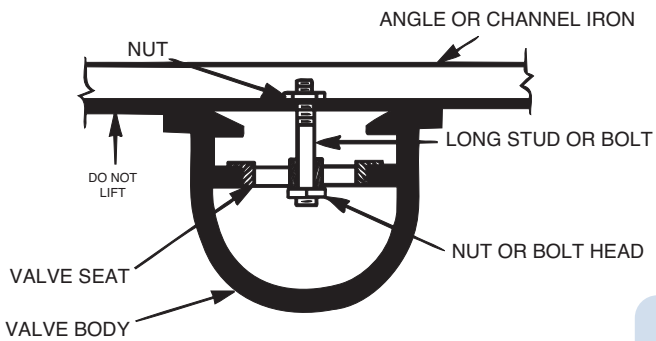

© Copyright CLA-VAL - Specifications subject to change without notice.

Lime Deposits

One of the easiest ways to remove lime deposits from the valve stem or other metal parts is to dip them in a 5-percent muriatic acid solution just long enough for the deposit to dissolve. This will remove most of the common types of deposits. **CAUTION: USE EXTREME CARE WHEN HANDLING ACID.** Rinse parts in water before handling. If the deposit is not removed by acid, then a fine grit (400) wet or dry sandpaper can be used with water.

Inspection of Parts

After the valve has been disassembled, each part should be examined carefully for signs of wear, corrosion, or any other abnormal condition. Usually, it is a good idea to replace the rubber parts (diaphragm and disc) unless they are free of signs of wear. These are available in a repair kit. Any other parts which appear doubtful should be replaced. WHEN ORDERING PARTS, BE SURE TO GIVE COMPLETE NAMEPLATE DATA, ITEM NUMBER AND DESCRIPTION.

NOTE: If a new disc isn't available, the existing disc can be turned over, exposing the unused surface for contact with the seat. The disc should be replaced as soon as practical.

Reassembly

1. Reassembly is the reverse of the disassembly procedure. If a new disc has been installed, it may require a different number of spacer washers to obtain the right amount of "grip" on the disc. When the diaphragm assembly has been tightened to a point where the diaphragm cannot be twisted, the disc should be compressed very slightly by the disc guide. Excessive compression should be avoided. Use just enough spacer washers to hold the disc firmly without noticeable compression.
2. **MAKE SURE THE STEM NUT IS VERY TIGHT**. Attach a good fitting wrench to the nut and give it a sharp "rap" rather than a steady pull. Usually several blows are sufficient to tighten the stem nut for final tightening. Failure to do so could allow the diaphragm to pull loose and tear when subjected to pressure.
3. Carefully install the diaphragm assembly by lowering the stem through the seat bearing. Take care not to damage the stem or bearing. Line up the diaphragm holes with the stud or bolt holes on the body. On larger valves with studs, it may be necessary to hold the diaphragm assembly up part way while putting the diaphragm over the studs.
4. Put spring in place and replace cover. Make sure diaphragm is lying smooth under the cover.
5. Tighten cover nuts firmly using a cross-over pattern until all nuts are tight.
6. Test Hytrol Valve before re-installing pilot valve system.

Test Procedure After Valve Assembly

There are a few simple tests which can be made in the field to make sure the Hytrol Valve has been assembled properly. Do these before installing pilot system and returning valve to service. These are similar to the three troubleshooting tests.

1. Check the diaphragm assembly for freedom of movement after all pressure is removed from the valve. **SEE CAUTION**. Insert fabricated tool into threaded hole in top of valve stem, and lift the diaphragm assembly manually. Note any roughness, sticking or grabbing. The diaphragm assembly should move smoothly throughout entire valve stroke. The tool is fabricated from rod that is threaded on one end to fit valve stem (See chart in Step 4 of "Disassembly" section.) and has a "T" Bar handle of some kind on the other end for easy gripping.

Place marks on this diaphragm assembly lifting tool when the valve is closed and when manually positioned open. The distance between the two marks should be approximately the stem travel shown in stem travel chart. (See "Freedom of Movement Check" section.) If the stroke is different than that shown, there is a good reason to believe something is mechanically restricting the stroke of the valve. The cover must be removed, the obstruction located and removed. (See "Maintenance" section for procedure.

Due to the weight of the diaphragm assembly this procedure is not possible on valves 8" and larger. on these valves, the same determination can be made by carefully introducing a low pressure-less than five psi) into the valve body with the cover vented. **SEE CAUTION**. Looking in cover center hole see the diaphragm assembly lift easily without hesitation, and then settle back easily when the pressure is removed.

2. To check the valve for drip-tight closure, a line should be connected from the inlet to the cover, and pressure applied at the inlet of the valve. If properly assembled, the valve should hold tight with as low as ten PSI at the inlet. See "Tight Sealing Check" section.)
3. With the line connected from the inlet to the cover, apply full working pressure to the inlet. Check all around the cover for any leaks. Re-tighten cover nuts if necessary to stop leaks past the diaphragm.
4. Remove pressure, then re-install the pilot system and tubing exactly as it was prior to removal. **Bleed air from all high points**.
5. Follow steps under "Start-Up and Adjustment" Section in Technical Manual for returning complete valve back to service.

© Copyright CLA-VAL - Specifications subject to change without notice.

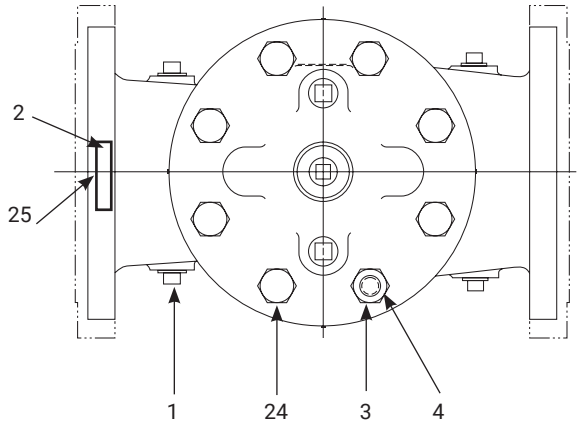

TOP VIEW

Item No.	Description
1	Pipe Plug
2	Drive Screws (for nameplate)
3	Hex Nut (8” and larger)
4	Stud (8” and larger)
5	Cover Bearing
6	Cover
7	Stem Nut
8	Diaphragm Washer
9	Diaphragm
10	Spacer Washers
11	Disc Guide
12	Disc Retainer
13	Disc
14	Stem
15	Seat
16	Body
17	Spring
22	Flat Head Screws (10” and larger)
23	Seat O-Ring
24	Hex Head Bolt (3” thru 6”)
25	Nameplate (Mounted on inlet flange)
26	Upper Spring Washer (Epoxy coated valves only)
27	Lower Spring Washer (Epoxy coated valves only)
28	Cover Bearing Housing (20”, 24”, & 30”)
29	Cover Bearing Housing O-Ring (20”, 24”, & 30”)
30	Hex Bolt (20” & 24”)
31	Pipe Cap (20”, 24”, & 30”)

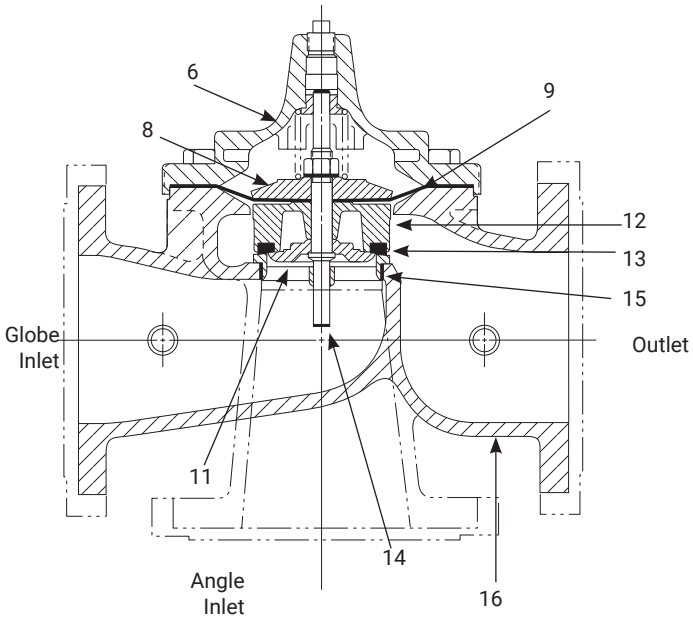

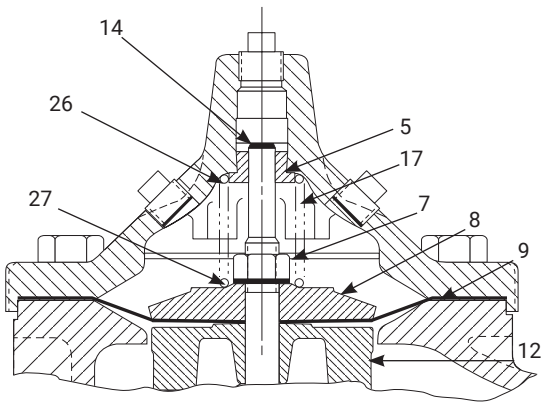

3" — 6" COVER DETAIL

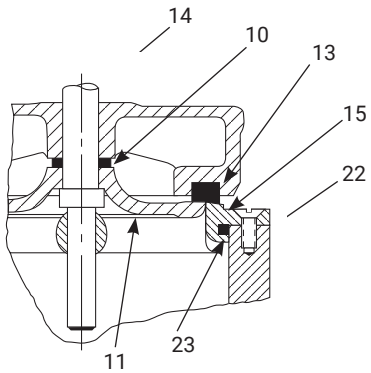

10" — 24" SEAT DETAIL

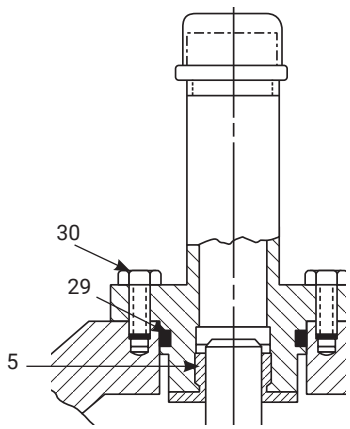

20" — 24" COVER DETAIL

© Copyright CLA-VAL - Specifications subject to change without notice.

Model 100-20

600 SERIES HYTROL VALVE SERVICE DATA

DESCRIPTION 100-01 HYTROL VALVE

The Cla-Val Model 100-01 Hytrol Valve is a main valve for Cla-Val Automatic Control Valves. It is a hydraulically operated, diaphragm-actuated, globe or angle pattern valve. This valve consists of three major components; body, diaphragm assembly, and cover. The diaphragm assembly is the only moving part. The diaphragm assembly uses a diaphragm of nylon fabric bonded with synthetic rubber. A synthetic rubber disc, contained on three and one half sides by a disc retainer and disc guide, forms a seal with the valve seat when pressure is applied above the diaphragm. The diaphragm assembly forms a sealed chamber in the upper portion of the valve, separating operating pressure from line pressure.

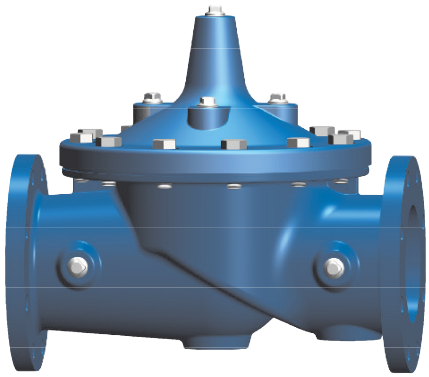

DESCRIPTION 100-20 600 SERIES HYTROL VALVE

The Cla-Val Model 100-20 Hytrol Valve (600 Series main valve) have only one part -the body- that is different from standard 100 Series Cla-Val main valve parts. The remaining parts of the 600 series main valve are standard Cla-Val main valve parts. All service and maintenance information for the standard 100 Series main valves also apply to the 600 series main valves. The most important thing to remember when ordering main valve repair kits and replacement parts, except for the body, all other parts are going to be for a smaller size main valve. Cla-Val identifies main valve parts with the flange size of the standard 100 Series main valve. Refer to the “Main Valve Sizes” chart below.

Hytrol Service Data

Hytrol Service Data

Hytrol Size				Stem Travel		Cover Capacity Displacement		Cover Center NPT	Cover Nut or Bolt [1]					Cover Lifting Holes	Valve Stem Internal Thread	Stem Nut [3]			
100-01		100-20							Thread	Socket	Qty	Torque, Lubricated[2]				Thread	Socket (Long)	Torque, Lubricated[2]	
IN	MM	IN	MM	IN	MM	Gallons	Liters					FT. LBS	IN. LBS					FT. LBS	IN. LBS
1	25	—	—	0.24	6	0.02	—	1/4	1/4 – 20	7/16	8	—	80	—	—	3/8 – 24	9/16	—	80
1 1/4	32	—	—	0.49	12	0.02	0.08	1/4	5/16 – 18	1/2	8	12	—	—	#10 – 32	7/16 – 20	11/16	12	—
1 1/2	40	—	—	0.49	12	0.02	0.08	1/4	5/16 – 18	1/2	8	12	—	—	#10 – 32	7/16 – 20	11/16	12	—
2	50	3	80	0.59	15	0.03	0.12	1/2	3/8 – 16	9/16	8	20	—	—	#10 – 32	1/2 – 20	3/4	16	—
2 1/2	65	—	—	0.71	18	0.04	0.16	1/2	7/16 – 14	5/8	8	36	—	—	#10 – 32	5/8 – 18	15/16	32	—
3	80	4	—	0.84	21	0.08	0.3	1/2	1/2 – 13	3/4	8	50	—	—	1/4 – 28	5/8 – 18	15/16	32	—
4	100	6	—	1.09	28	0.17	0.64	3/4	3/4 – 10	1 1/8	8	125	—	—	1/4 – 28	3/4 – 16	1 1/8	55	—
6	150	8	—	1.58	40	0.53	2.01	3/4	3/4 – 10	1 1/8	12	125	—	—	3/8 – 24	7/8 – 14	1 5/16	100	—
8	200	10	—	2.24	57	1.26	4.77	1	3/4 – 10	1 1/4	16	125	—	5/8 – 11	3/8 – 24	1 1/8 – 12	1 3/4	180	—
10	250	12	—	2.71	69	2.51	9.5	1	7/8 – 9	1 7/16	20	160	—	3/4 – 10	3/8 – 24	1 1/4 – 12	1 7/8	300	—
12	300	14, 16	350, 400	3.34	85	4.00	15.14	1 1/4	1 1/8 – 7	1 13/16	20	320	—	3/4 – 10	3/8 – 24	1 1/2 – 12	2 1/4	500	—
14	350	—	—	4.08	104	6.50	24.61	1 1/2	1 1/4 – 7	2	20	450	—	1 – 8	3/8 – 24	1 1/2 – 12	2 1/4	500	—
16	400	18, 20, 24	450, 500, 600	4.58	116	9.60	36.34	2	1 1/4 – 7	2	20	450	—	1 – 8	1/2 – 20	2 – 16	3	600	—
18	500	—	—	5.13	130	11.00	42	1	1 1/4 – 7	2	24	450	—	1 – 8	3/4 – 16	2 1/4 – 16	3 7/16	1000	—
20	500	—	—	5.63	143	12.00	45.42	1	1 3/8 – 6	2 3/16	24	600	—	1 – 8	3/4 – 16	2 1/4 – 16	3 7/16	1000	—
24	600	30	—	6.50	165	29.00	109.78	1	1 1/2 – 12	2 3/8	24	850	—	1 1/8 – 7	3/4 – 16	3 – 12	4 5/8	1600	—
30	750	36	900	8.00	203	42.00	158.99	2	1 1/2 – 12	2 3/8	32	850	—	1 1/8 – 7	3/4 – 16	3 – 12	4 5/8	3000	—
36	900	42, 48, 56	1050, 1200, 1400	8.71	221	90.00	340.69	2	1 3/4 – 10	2 3/4	36	1250	—	1 1/4 – 12	3/4 – 16	3 1/2 – 8	6	3000	—

(1) Valve sizes 6” and smaller use hex bolts for cover fasteners. Valve sizes 8” and larger use studs with hex nuts.
(2) Clean all threads and apply anti-seize prior to reassembly of threaded fasteners. Torque values are based on standard SST material.

© Copyright CLA-VAL - Specifications subject to change without notice.

CLA-VAL

— MODEL — **CDS6**

ALTITUDE CONTROL

INTRODUCTION
The Cla-Val Model CDS6 Altitude Control is a spring loaded, 3-way, diaphragm-actuated control that provides high-level shut-off for Cla-Val Altitude Control Valves. It remotely senses pressure in the reservoir or tank. There are five altitude ranges available, 5 to 40 feet, 30 to 80 feet, 70 to 120 feet, 110 to 160 feet and 150 to 200 feet. The spring adjusting nut can be set to stop flow into the reservoir within these ranges.

INSTALLATION
The CDS6 Altitude Pilot Control is normally supplied mounted on a Cla-Val 210 Series Altitude Valve which should be installed in a horizontal run of pipe with the main valve cover up. Two line block valves are recommended for valve servicing. If the CDS6 is mounted from the main valve by a few feet, then it must be installed with adjustment springs up for ease of adjustment and servicing. Consult factory for recommendations.

After the Cla-Val 210 Series Altitude Valve is installed in the pipeline close to the reservoir, install the required remote sensing line from the CDS6 to the reservoir or tank. The sensing line allows the CDS6 to sense the static pressure head of the reservoir. The sensing line should not be installed in the flowing line between the valve and the reservoir or into turbulent flow area. These locations do not reflect the true static head of the reservoir.

The remote sensing line should be 3/4" or larger copper tubing or Schedule 40 PVC pipe. Galvanized pipe is not recommended. The sensing line should slope (minimum 2 degrees) upward from the CDS6 toward the reservoir to self -purge air out of the line. The sensing line should have no high points to entrap air. A shutoff valve at the reservoir connection is recommended. For above ground reservoirs, the connecting point for the sensing line should be a minimum of 12" to 18" above reservoir bottom (if filling from bottom) or at fill pipe connection (if filling from side). Minimum high-level set-point adjustment is approximately five feet above the remote sensing point of connection.

Note: Please make sure to remove the plastic plug from the drain port before putting the valve in service if pilot drains to atmosphere.

CDS6 STOCK NUMBER 2" SIZE	CDS6 STOCK NUMBER 2 1/2" SIZE & LARGER	ALTITUDE RANGE (FT H.0)	NUMBER OF SPRINGS	PSI CHANGE PER TURN	ALTITUDE CHANGE PER TURN
29330-06F	29330-01E	5 - 40	1	0.32	0.75
29330-07H	29330-02G	30 - 80	2	0.64	1.50
29330-08K	29330-03J	70 - 120	3	0.96	2.20
29330-09B	29330-04A	110 - 160	4	1.28	3.00
29330-10D	29330-05D	150 - 200	5	1.60	3.70

OPERATION, START-UP AND ADJUSTMENT
When the reservoir pressure (head) is lower than the setpoint of the spring on the CDS6 Altitude Control ports "1" and "D" are interconnected. This relieves the main valve cover pressure to atmosphere. Line pressure then opens the main valve to start filling the reservoir.
Reservoir sensing pressure increases as the liquid level rises in the reservoir. When the sensing pressure increases to the set point of the CDS6 control spring, the control shifts interconnecting port "S" and port "1". This pressurizes the main valve cover chamber and the main valve closes.

By turning the adjusting nut the liquid level shutoff point will be changed. Turn the adjusting nut clockwise to raise the liquid level shutoff point; counterclockwise to lower the liquid level shutoff point. Follow the general operation and start-up instructions regarding purging air from the valve control system.

MAINTENANCE AND INSPECTION
Under normal operating conditions the CDS6 Altitude Control will be trouble free. There is a visual check possible to determine if there is damage to the diaphragm in the control. The Lower Cover/Pilot (a) is vented to atmosphere by means of a small hole in the wall of the casting. If water is discharging out of this opening, the diaphragm should be inspected for damage.

One other visual check and indication of a problem is continuous discharge from the drain port ("D") at the bottom of the CDS6.

The volume of drained water will vary according to the valve size. Continuous draining after main valve has fully opened will indicate a problem. Refer to the service suggestions to check for probable causes and remedies.

DISASSEMBLY
During preventive maintenance or service to the CDS6 Altitude Control, all pressure to the control must be shutoff. The CK2 shutoff cocks in the main valve control lines should be closed before starting disassembly. Main valves 4" and larger have CK2 cocks installed, however main valves smaller than 4" normally do not, therefore requiring closure of shutoff valves in the main line at the valve inlet and outlet. The shutoff cock or valve in the sensing line to the reservoir must also be closed.

WARNING: Failure to shutoff and release pressure prior to any disassembly can result in serious damage to equipment or injury to personnel.

1. Disconnect tubing at the CDS6 Altitude Control.
2. Remove two mounting caps screws and two lock washers.
3. Remove CDS6 Altitude Control from main valve to work bench or clean area. Parts must be kept clean.

DISASSEMBLY OF UPPER SPRING SECTION
1. Unscrew adjusting nut (4) from upper stem (5).
   NOTE: Count the number of turns required to remove the nut (4), record this information for reference when reassembling.
   The CDS6 Altitude Control can then be approximately reset for the same reservoir liquid level shut-off point.

2. Remove the thrust washer (3), swivel retainer (2) and spring retainers if applicable.

3. Remove Spring(s) (6), bellows (7) and set-screw (8)

4. Remove twelve hex nuts (33), and twelve bolts (32), and set mounting bracket (29) aside.

   Note: Assembly contains two (of twelve) longer bolts which are used for the mounting bracket.

5. Remove upper cover (13) from lower assembly, and push stem assembly through.

6. Remove diaphragm washer nut (12), diaphragm nut washer (16) and diaphragm (14)

7. Separate upper stem from diaphragm washer by removing stem retaining pin. (11)

8. Inspect all parts for damage, wear and mineral deposits. Check O-ring (10) for wear, inspect and remove any deposit in O-ring area. Also inspect diaphragm for wear or cracks. Clean parts thoroughly and replace damaged parts as necessary. If, upon disassembly, sand and silt are found in the CDS6 Altitude Control, every effort must be made to eliminate this problem. Filters, or relocating the reservoir sensing line may be required if deposits are found in the sensing chamber of the control.

REASSEMBLY OF UPPER SPRING ASSEMBLY

1. Reassembly is in general, the reverse of disassembly. NOTE: A light coating of Dow Corning 33 grease, or equivalent, should be applied to CDS6 Altitude Control stems (5), before reassembly.

2. When replacing adjusting nut (4) tighten the same number of turns as referred to in **note** in paragraph (1) of "Disassembly Of Upper Spring Section".

DISASSEMBLY OF LOWER PILOT VALVE SECTION

1. Disassemble control per steps 1 through 5 in "Disassembly of upper section", to work on lower (pilot) cover (17)

2. Remove lower stem (21) spring (19) and retaining ring (18) as an assembly, inspect stem for damage.

3. Remove Poppet guide (28) and o-ring (27) from lower cover (17).

4. Remove Poppet (22-1) and poppet spring (26) and inspect poppet and disc for damage.

5. Remove Strainer screen (25)

6. Remove seat (24), **Note**: be sure not to nick or ding exposed sealing surface. To prevent binding and damage, use a wood dowel to evenly tap out the seat from TOP of lower cover (area from which lower stem was removed).

7. Inspect all parts for damage, wear and mineral deposits. If there has been discharge from vent hole, remove o-ring (20) from lower cover (17) and poppet guide (28). Inspect o-rings for wear or damage and o-ring groove for material build-up. Clean and/or replace as necessary. Inspect seat (24) and disc poppet assembly (22) for wear or damage. If poppet and/or disc are damaged they must be replaced as an assembly (item 22). Otherwise clean and polish surfaces of moving parts with 600 wet/dry sandpaper. Also clean strainer screen (25) of any deposits

REASSEMBLY OF LOWER PILOT VALVE SECTION

1. Reassembly is in general, the reversal of disassembly. **Note**: A light coating of Dow Corning 33 grease, or equivalent should be applied to all o-rings and moving part surfaces (20,21,22-1 23 and 27).

2. Lay lower cover (17) on its top (do not damage serrated surface), insert the seat (24) with o-ring (23) in lower (pilot) cover with finger. Use a wood dowel to push the seat in fully with hand pressure ONLY. **Note**: damage to the seat can compromise the sealing ability of the control, and careful efforts must be applied on reassembly of this component.

3. Insert strainer (25).

4. Install poppet guide, o-ring, spring and poppet assembly. (See Note #1 for greasing)

5. Thread and securely fasten poppet guide assembly into lower cover (recommended 200-250 in/lbs.)

6. Turnover lower cover, and assemble as an assembly lower stem (21) retainer (18) and spring (19) into lower cover, being careful not damage o-ring (20).

COMPLETING ASSEMBLY

1. Reassembly of twelve nuts (33) and bolts (32) should be torqued to 200-250 in/lbs. **Note:** assembly contains two longer bolts (item 32) for the support bracket. These two bolts are to be assembled with bracket (29) on the two larger support flats located on the lower cover located 90 degrees from common/supply ports.

3. Install CDS6 Altitude Control assembly on main valve.

4. Replace tube lines and fittings exactly as removed.

SERVICE SUGGESTIONS

UPPER (SPRING) SECTION

SYMPTOM	PROBABLE CAUSE	REMEDY
Vent leaks in lower cover (17)	Diaphragm (14) damaged Diaphragm nut (12) loose O-ring (20) damaged	Replace diaphragm Tighten nut (12) Replace O-ring (20)
Leakage past stem stem (5)	O-ring (10) damaged	Replace O-ring
Stem (5) movement restricted or erratic	*Sand or silt in sensing chamber above diaphragm Sensing line clogged Sensing line valve closed Sensing line sagging or bent collecting sediment	Remove foreign matter from sensing chamber Clean line Open valve fully Straighten and support sensing line to reservoir
	Sensing line has high point trapping air in the line	Straighten sensing line. Must slope upward from altitude control to the reservoir

*NOTE: if this problem occurs, a sand trap should be installed in the sensing line, or the line moved to a point on the reservoir where sand or silt cannot enter this line.

SERVICE SUGGESTIONS

LOWER (PILOT VALVE) SECTION

SYMPTOM	PROBABLE CAUSE	REMEDY
Vent in lower cover (17) leaks	O-ring (20) worn or damaged. See Upper Spring Section service suggestion	Replace O-ring (20)
Flow from supply port to valve cover port restricted	Clogged strainer screen(25) Silt packed in seat (24) and lower stem (21)	Remove screen and clean Clear area of blockage
Continuous drain leak. Main valve closed	Seat (24) damaged Disc in poppet assembly (22) damaged Foreign object between disc and seat (24) O-ring (20) in poppet guide (28) damaged	Inspect and replace Inspect and replace poppet assembly (22) Remove object Replace O-ring
Continuous drain leak. Main valve open	Main valve diaphragm worn or stem nut loose	Service main valve. Replace diaphragm or tighten stem nut

©Copyright Cla-Val 2011 Printed in USA Specifications subject to change without notice.

Model CDS6B
ALTITUDE PILOT CONTROL

PARTS LIST

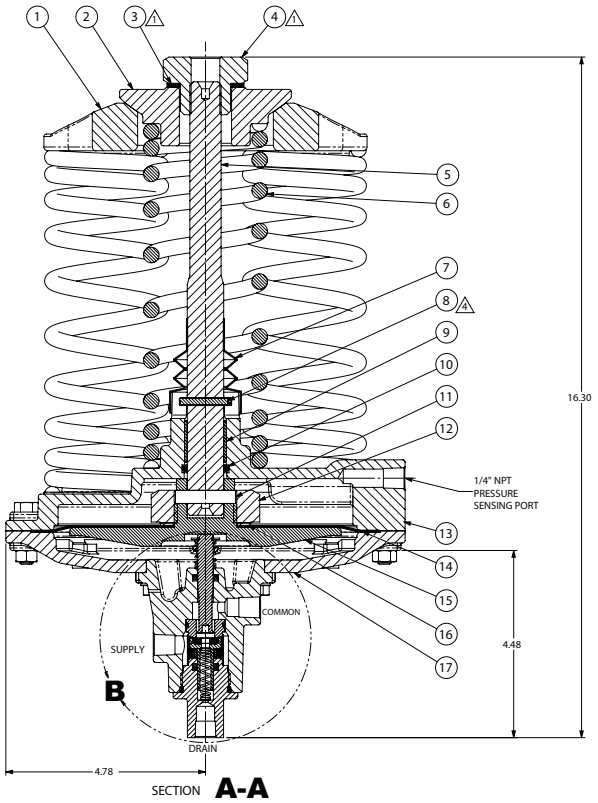

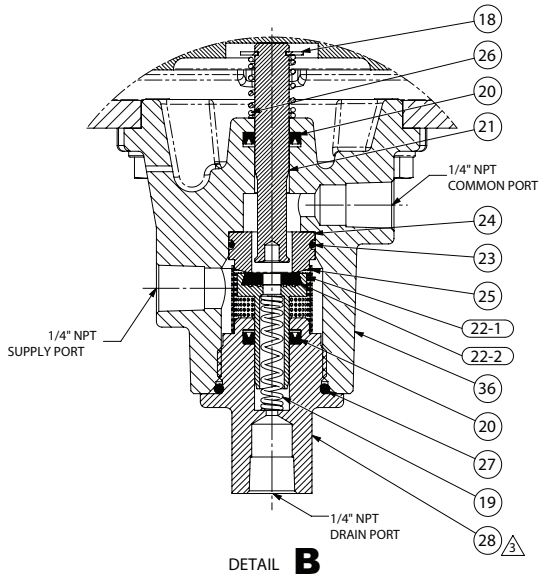

Note: Please make sure to remove the plastic plug from the drain port before putting the valve in service if pilot drains to atmosphere.

When Ordering, Please Specify

1. All Nameplate data
2. Item Number
3. Description
4. Material

Table 1		
Retainer Part No.	Number of Springs	Number of Washers (Item 31)
---	1	0
29332-01C	2 or 3	2
29331-01E	4 or 5	4

Table 2					
Valve Sizes 2" and Smaller CDS6B Stock No.	Valve Sizes 2-1/2" and Larger CDS6B Stock No.	Altitude Range (FT H2O)	No. of Springs	PSI Change Per Turn	Altitude Change Per Turn (FT)
214486-06E	214486-01K	5 to 40 Ft.	1	0.32	0.75
214486-07D	214486-02J	30 to 80 Ft.	2	0.64	1.50
214486-08C	214486-03H	70 to 120 Ft.	3	0.96	2.25
214486-09B	214486-04G	110 to 160 Ft.	4	1.28	3.00
214486-10J	214486-05F	150 to 200 Ft.	5	1.60	3.75

Item No.	Description	QTY	Material
1[2]	Retainer, Spring (see Table 1)	-	Cast Iron
2	Retainer Swivel	1	Cast Iron
3	Washer, Thrust	1	Nylon
4	Nut, Adjusting	1	Naval Brass
5	Stem, Upper	1	Stainless Steel
6	Spring (see Table 2)	-	Steel
7[2]	Bellows	1	Neoprene
8[2]	Set Screw	1	Stainless Steel
9	Bearing, Self-Lubricating	1	Teflon
10[2]	O-Ring	1	Buna-N
11	Pin, Stem Retaining	1	Stainless Steel
12	Nut, Diaphragm Washer	1	Stainless Steel
13	Cover, Upper	1	Stainless Steel
14[2]	Diaphragm	1	Buna-N
15	Washer Diaphragm	1	Stainless Steel
16	Washer, Diaphragm Nut	1	Stainless Steel
17	Cover, Lower	1	Stainless Steel
18[1, 2]	Retaining Ring	1	Stainless Steel
19[1, 2]	Heavy Spring, Poppet	1	Stainless Steel
20[1, 2]	U-Seal	2	Buna-N
21[1]	Stem, Lower	1	Stainless Steel
22[1, 2]	Poppet Assembly	1	-
22-1	Poppet	1	Stainless Steel
22-2	Disc	1	Buna-N
23[1, 2]	O-Ring	1	Buna-N
24[1]	Seat	1	Stainless Steel
25[1]	Strainer	1	Stainless Steel
26[1]	Spring, Lower Stem	1	Stainless Steel
27[1, 2]	O-Ring	1	Buna-N
28[1]	Guide, Poppet	1	Stainless Steel
29	Bracket, Mounting	1	Stainless Steel
30	Bolt, 5/16-18 x 1.25	8	Stainless Steel
31	Washer (see Table 1)	-	Stainless Steel
32	Bolt, 5/16-18 x 2.00	4	Stainless Steel
33	Nut, 5/16-18	12	Stainless Steel
34[1, 2]	Washer, Plain, Flat	6	Stainless Steel
35[1, 2]	Bolt, 5/16-18 x 0.63	4	Stainless Steel
36[1, 2]	Body, Pilot	1	Stainless Steel

1. Lower Body Replacement Kit (Part # 214486-12G)
2. Recommended Spare Parts Kit (Part # 203494-01C)

© Copyright CLA-VAL - Specifications subject to change without notice.

Technical Bulletin

CDS6 Improvements

Recently, our Engineering Department redesigned a few internal parts of the CDS6 Pilot Control used on 210 Series Altitude Valves. These new parts improve its sensitivity at high differential pressures and allow it to work with inlet supply pressures up to 300 psi (previous maximum recommended pressure was 150 psi). The new control is identified as CDS6A and new part numbers are assigned to distinguish it from the original CDS6. Adjustment ranges remain the same.

New parts inside the CDS6A are a) stem seals, b) disc and poppet assembly, c) lower stem, d) lower cover, e) poppet guide, and f) poppet spring. The CDS6A uses new low-friction seals on the lower stem and the disc and poppet assembly. Also, the new stem and poppet have a special low-friction nickel-Teflon coating and are dimensionally interchangeable with CDS6 parts. The new lower cover and poppet guide have larger internal dimensions for the new seals and are not interchangeable with CDS6 parts. Also, the poppet spring has a heavier load and is not interchangeable. All other parts remain the same.

All bills of material for top assemblies using the CDS6 have been changed to the new control. It will take some time for us to change assembly drawings and deplete existing parts before we begin using the CDS6A. We plan to finalize the change during first quarter of 2003.

A new CDS6A repair kit is p/n 20349401C and will not work with existing CDS6 controls. The repair kit will include instructions and tools to install new stem seals. When servicing existing CDS6 controls the current repair kit p/n 20119301A should be used.

A modification kit consisting of all new parts and instructions is p/n 20354801G. Field modification is recommended only for installations where it is determined to be necessary.

Range (ft)	size	p/n	size	p/n
5 - 40	2 ½" & larger	20354701K	2" & smaller	20354706E
30 - 80	2 ½" & larger	20354702J	2" & smaller	20354707D
70 - 120	2 ½" & larger	20354703H	2" & smaller	20354708C
110 - 160	2 ½" & larger	20354704G	2" & smaller	20354709B
150 - 200	2 ½" & larger	20354705F	2" & smaller	20354710J

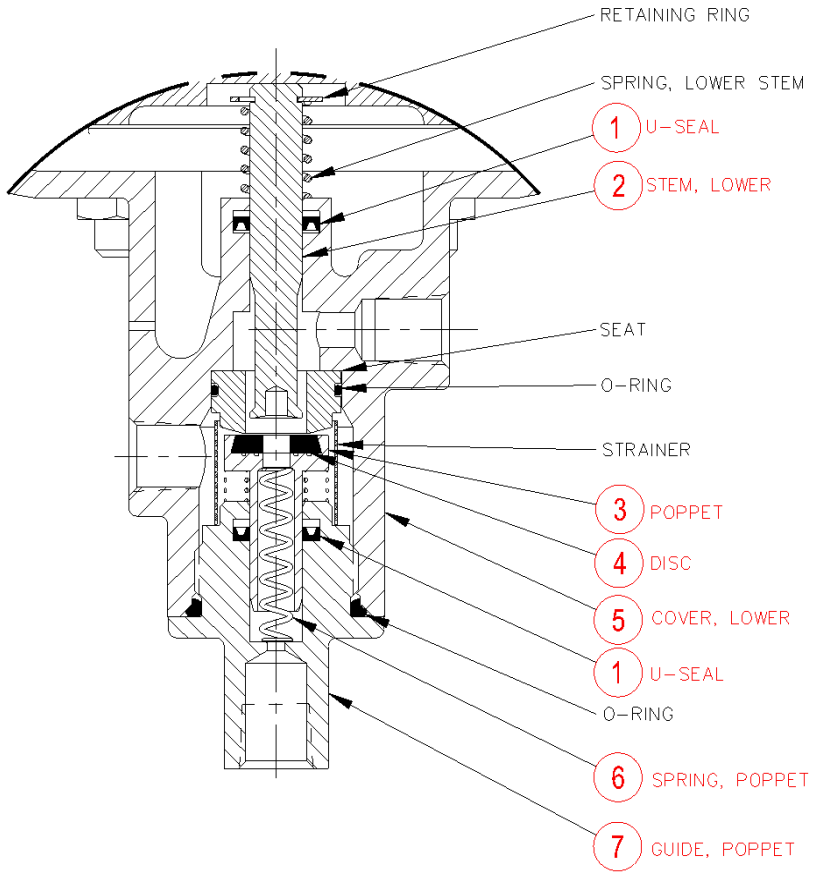

NEW CDS6A PARTS ARE ABOVE NUMBERED ITEMS.

A) All other parts are the same as current CDS6 parts.

B) Two new low-friction U-Seals, Item 1, will not fit into O-ring grooves of CDS6 lower cover and poppet guide. The machined groove dimensions are different between the O-ring version and the new U-seal version parts. New Lower Cover, Item 5, and Poppet Guide, Item 7, have proper dimensions for U-Seal.

C) Lower Stem, Item 2, and Poppet, Item 3, are dimensionally interchangeable with CDS6 parts that are now obsolete. These new parts have a special low-friction coating which may enhance CDS6 performance.

D) Poppet Spring, Item 6, has a heavier load rating and is not interchangeable with CDS6 poppet spring. Sensitivity will be greater than a 12" differential, if used in CDS6 controls.

Model X101/X101D

Valve Position Indicator & Pilot System Components

- **Positive Visual Indicator**
- **Frictionless**
- **Leak Proof**
- **Easy Maintenance and Cleaning**
- **Protected Indicator Rod**

The Cla-Val Model X101 Visual Position Indicator is designed to display Cla-Val valve position quickly and easily. A solid brass indicator rod fastened directly to the valve stem moves up and down inside a pyrex tube. The tube is contained within a brass housing which is open on two opposite sides to permit clear vision of the indicator rod.

To purge air that may be trapped in the valve cover, a vent valve in the top of the housing is provided. Model X101 valve position indicator is furnished complete for installation on specified size Cla-Val Automatic Control Valve.

Dimensions

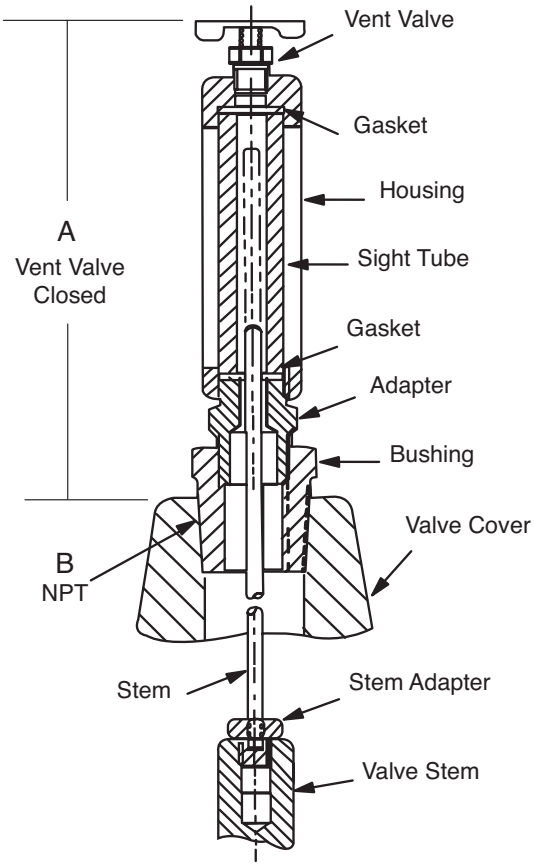

VALVE SIZE	A INCHES	B NPT
1"	5.88	1/4"
1 1/4"	3.21	1/4"
1 1/2"	3.21	1/4"
2"	3.33	1/2"
2 1/2"	3.33	1/2"
3"	3.33	1/2"
4"	4.52	3/4"
6"	4.52	3/4"
8"	5.83	1"
10"	7.70	1"
12"	8.20	1 1/4"
14"	8.20	1 1/2"
16"	10.81	2"
18"	12.04	1"
20"	12.04	1"
24"	12.04	1"

Dimension "A" is height added to valve by indicator assembly

Specifications

Sizes:	1" thru 24"
Materials:	Brass, Pyrex Tube
Pressure Rating:	400 psi
Optional Material:	Stainless Steel

Installation

Can be installed on any Cla-Val basic main valve in a few minutes. Simply replace the fitting on top of the valve cover with the indicator assembly.

When Ordering, Please Specify

1. Valve Size
2. Catalog No. X101
3. Valve Series No. (Appears on Valve Nameplate)
4. Optional Material
   Stainless Steel

CSM-11 Solenoid Control

Body Material

Standard: Bronze with Monel Trim

Option: Bronze with Stainless Steel Trim

CDS6A Altitude Control

Wetted Body Material

Standard: Bronze with Stainless Steel Trim

No. of Springs	Altitude Ranges
1	5 - 40 ft
2	30 - 80 ft
3	70 - 120 ft
4	110 - 160 ft
5	150 - 200 ft

CDC-1 Check Valve

Size	Body Material	Trim Material
3/8"-1/2"	**Brass**	**Delrin**

CSC Swing Check Valve

Size	Body Material	Trim Material
3/8"-1"	**Brass**	**Brass/Buna N**

CN Series - Needle Valves

Size	Body Material		Trim Material
1/4"-1"	**Standard:**	**Bronze**	**Brass**
	Option:	**Stainless Steel**	**Stainless Steel**

CK Series - Isolation Valve

Size	Body Material		Trim Material
3/8"-1"	**Standard:**	**Bronze**	**Stainless Steel/Teflon**
	Option:	**Stainless Steel**	**Stainless Steel/Teflon**

CLA-VAL®

E-X101/X101D (R-01/2025)

CLA-VAL

1701 Placentia Avenue • Costa Mesa, CA 92627

800-942-6326 • Web Site: www.cla-val.com • E-mail: info@cla-val.com

CLA-VAL CANADA
4687 Christie Drive
Beamsville, Ontario
Canada L0R 1B4
Phone: 905-563-4963
www.cla-val.com
E-mail sales@cla-val.ca

CLA-VAL EUROPE
Chemin des Mésanges 1
CH-1032 Romanel/
Lausanne, Switzerland
Phone: 41-21-643-15-55
www.cla-val.ch
E-mail: info@cla-val.ch

CLA-VAL UK
Dainton House, Goods Station Road
Tunbridge Wells
Kent TN1 2 DH England
Phone: 44-1892-514-400
www.cla-val.ch
E-mail: info@cla-val.co.uk

CLA-VAL FRANCE
Porte du Grand Lyon 1
ZAC du Champ du Périer
France - 01700 Neyron
Phone: 33-4-72-25-92-93
www.cla-val.ch
E-mail: info@cla-val.ch

CLA-VAL ASIA PACIFIC
45 Kennaway Road
Woolston, Christchurch, 8023
New Zealand
Phone: 64-39644860
www.cla-valpacific.com
E-mail: info@cla-valpacific.com

© COPYRIGHT CLA-VAL Printed in USA Specifications subject to change without notice.

visit www.cla-val-latinamerica.com for Spanish literature

Model X101D

VALVE POSITION INDICATOR

PARTS LIST

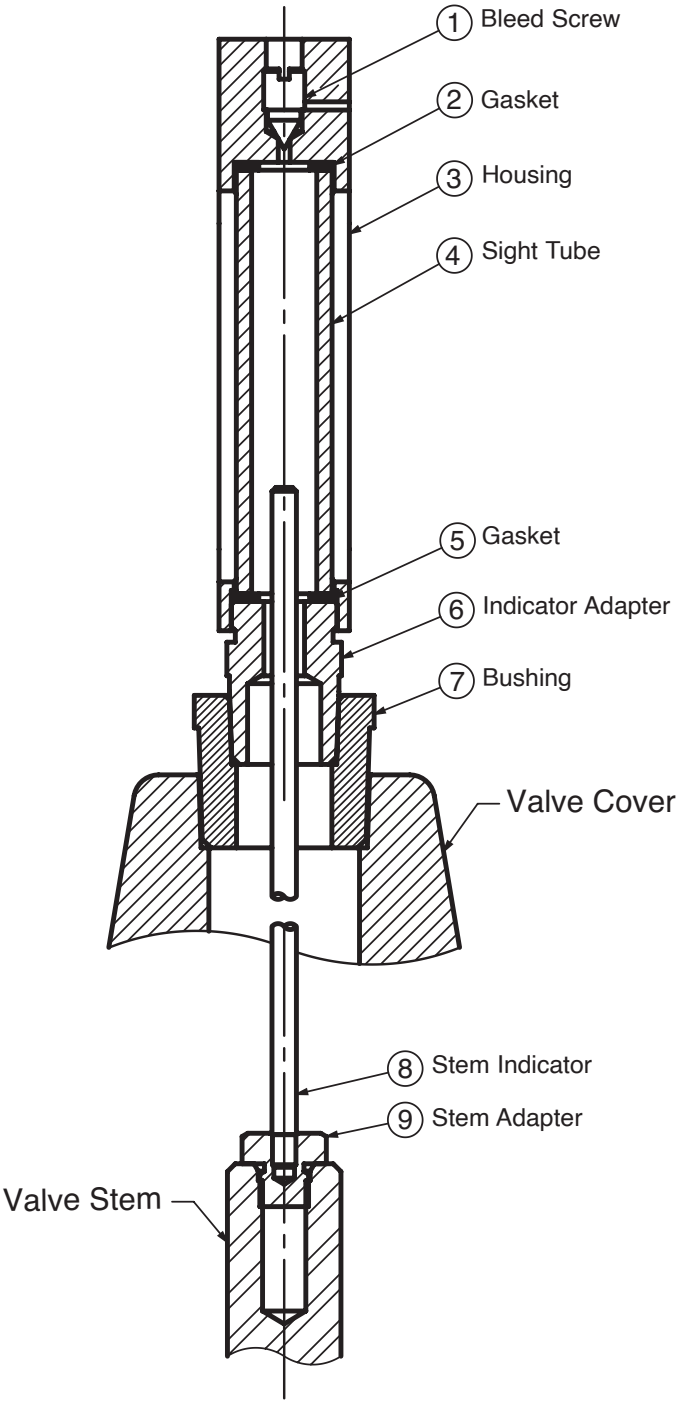

Item No.	Description	Material
1	Bleed Screw	Stainless Steel
2	Gasket	Buna-N®
3	Housing	Stainless Steel
4	Sight Tube	Pyrex
5	Gasket	Buna-N®
6	Indicator Adapter	Stainless Steel
7	Bushing	Stainless Steel
8	Stem Indicator	Stainless Steel
9	Stem Adapter	Stainless Steel

When Ordering, Please Specify

1. All Nameplate data
2. Item Number
3. Description
4. Material

© Copyright CLA-VAL - Specifications subject to change without notice.

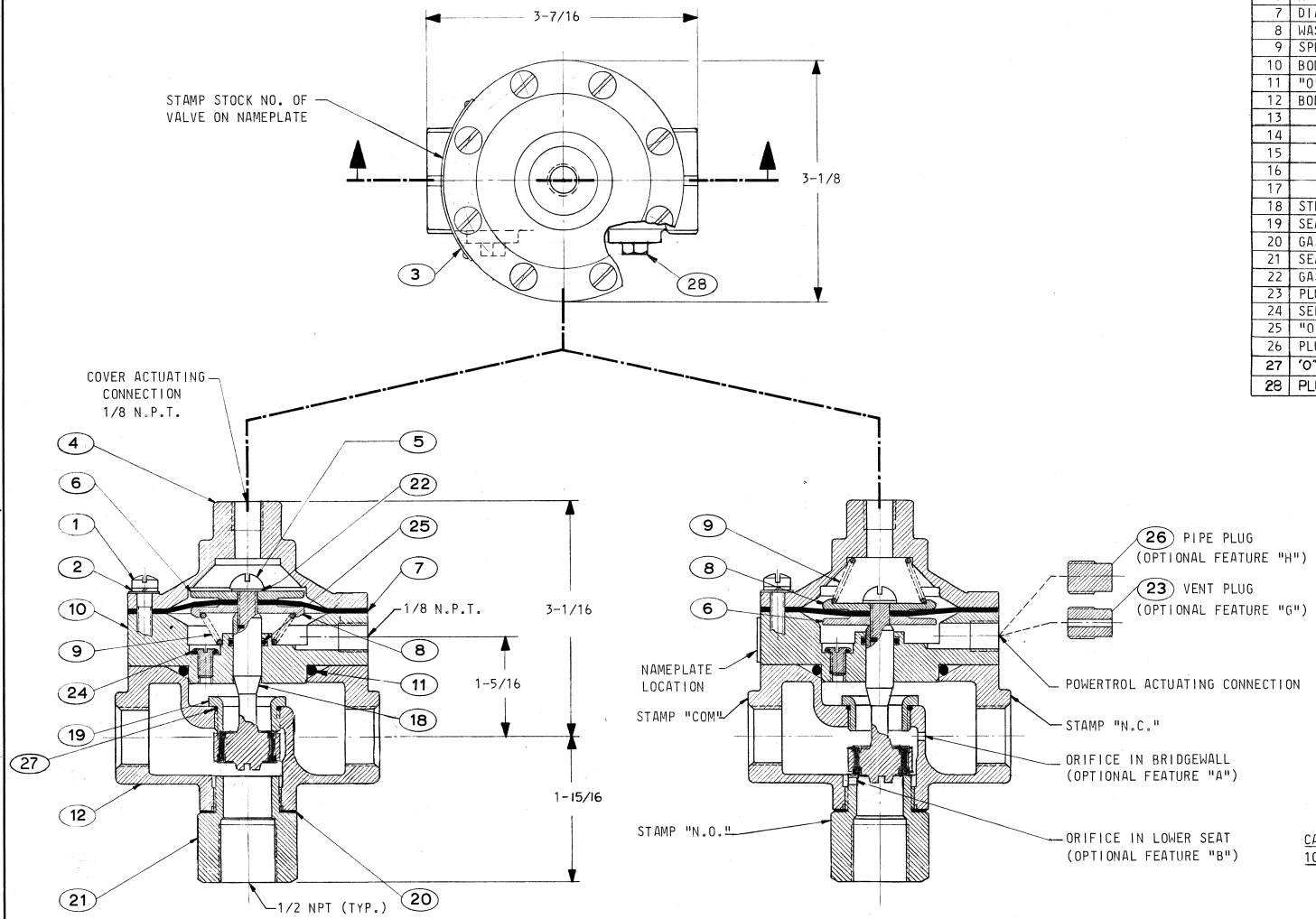

102C-2 SERIES
(WITH SPRING UNDER DIAPHRAGM)

102C-3 SERIES
(WITH SPRING OVER DIAPHRAGM)

PARTS LIST

ITEM NO.	DESCRIPTION
1	SCREW, MACHINE, FIL. HD.
2	WASHER, LOCK
3	NAMEPLATE
4	COVER
5	SCREW, MACHINE, RD. HD.
6	WASHER, DIAPHRAGM
7	DIAPHRAGM
8	WASHER, DIAPHRAGM, SPRING RETAINING
9	SPRING
10	BODY, POWERTROL
11	"O" RING, BODY TO BODY
12	BODY
13	
14	
15	
16	
17	
18	STEM ASSEMBLY
19	SEAT, VALVE, UPPER
20	GASKET
21	SEAT, VALVE, LOWER
22	GASKET, STEM
23	PLUG, VENT (USED ONLY WITH OPTIONAL FEATURE "G")
24	SEELSKREW (OMIT WITH OPTIONAL FEATURE "H")
25	"O" RING (OMIT WITH OPTIONAL FEATURE "H")
26	PLUG, PIPE (USED ONLY WITH OPTIONAL FEATURE "H")
27	"O" RING, SEAT
28	PLUG, PIPE 1/8"

BASIC VALVE

CLA-VAL CATALOG NUMBER	DESCRIPTION
102C-2	SPRING UNDER DIAPHRAGM BOTH ACTUATING CONNECTIONS OPEN
102C-3	SPRING OVER DIAPHRAGM BOTH ACTUATING CONNECTIONS OPEN

OPTIONAL FEATURES

SUFFIX LETTER	DESCRIPTION
A	ORIFICE IN BRIDGEWALL
B	ORIFICE IN LOWER SEAT
G	VENT PLUG IN POWERTROL ACTUATING CONNECTION
H	PIPE PLUG IN POWERTROL ACTUATING CONNECTION

CATALOG NUMBER EXAMPLE:

102C-2 B H

- H — PIPE PLUG IN POWERTROL ACTUATING CONNECTION
- B — ORIFICE IN LOWER SEAT
- 102C-2 — BASIC VALVE WITH SPRING UNDER THE DIAPHRAGM

ILTR.	DESCRIPTION	BY	DATE
E	DELETED ITEMS 13, 14, 15, 16 AND 17 AND REPLACE WITH NEW ITEM 18 STEM ASSEMBLY (WAS STEM). (ECO 19036)	PMC	6-8-02
D	ADD ITEM NO 28 (ECO 2681)	EP	6.30.81
C	ADD ITEM NO. 27	DP	10-27-70
B	DIM. 1-15/16 WAS 1-3/4	D.P.	1-12-70
A	REVISED NAMEPLATE	B.F.	1.23.67

REVISION RECORD

CLA-VAL CO. NEWPORT BEACH, CALIFORNIA, U.S.A.

DESCRIPTION: 1/2" NO. 102C SERIES THREE-WAY VALVE SINGLE DIAPHRAGM - POWERTROL TYPE SCREWED ENDS

CODE IDENT. NUMBER 86184

		DATE
DR.	B.F.	11.16.66
CHK.	J.M.	11-17-66
APPD.	H.W.E.	11-17-66
SCALE	1"=1"	

DRAWING NUMBER 66859 REV. E

DC 007A

CVCL 1234

BULLETIN 8320 ASCO FORM NO. V5291R2
3-WAY SOLENOID VALVES, NORMALLY OPEN NORMALLY CLOSED AND UNIVERSAL CONSTRUCTION

DESCRIPTION
Bulletin 8320 is a small 3-way solenoid operated valve with all three pipe connections located in the body. The bodies are of brass or stainless steel construction. Standard valves have General Purpose, Nema Type 1 Solenoid Enclosures. Valves that are equipped with a solenoid enclosure which is designed to meet Nema Type 4-Water tight, Nema Type 7 (C or D) Hazardous Locations - Class I, Group C or D, and Nema Type 9 (E, F or G) Hazardous Locations - Class II, Group E, F or G are shown on separate sheets of Installation and Maintenance Instructions, Form Numbers V-5391 and V-5381.

MANUAL OPERATORS (OPTIONAL)
Valves with suffix “MO” or “MS” in catalog number are provided with a Manual Operator which allows manual operation when desired or during an interruption of electrical power.

OPERATION
Normally Closed: Applies pressure when solenoid is energized: exhausts pressure when solenoid is de-energized
Normally Open: Applies pressure when solenoid is de-energized; exhausts pressure when solenoid is energized.
Universal: For normally closed or normally open operation, selection or diversion of pressure can be applied at port 1 (A), 2 (B), or 3 (C).

NORMALLY OPEN PRESS AT 3 (C)	NORMALLY CLOSED PRESS AT 3 (C)	UNIVERSAL-PRESS AT ANY ORIFICE.	FORM
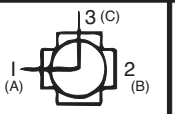	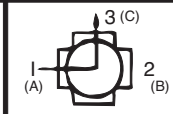	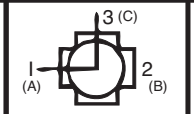	SOLENOID DE-ENERGIZED
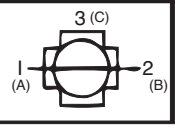	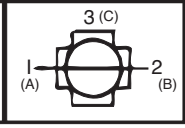	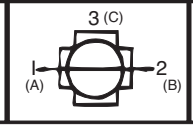	SOLENOID ENERGIZED

NOTE: Port Markings 1, 2, and 3 correspond directly to A, B and C.

INSTALLATION
Check Nameplate for correct Catalog Number, pressure, voltage and service.

POSITIONING
Valve may be mounted in any position

PIPING
Connect piping to valve according to markings on valve body. Refer to Flow Diagram provided. Apply pipe compound sparingly to male pipe threads only; if applied to valve threads, it may enter valve and cause operational difficulty. Pipe strain should be avoided by proper support and alignment of piping. When tightening pipe, do not use valve as lever.

IMPORTANT: For protection of the solenoid valve, install a strainer or filter suitable for the service involved in the inlet side as close to the valve as possible. Periodic cleaning is required depending on the service conditions.

WIRING
Wiring must comply with local and National Electrical Codes. For valves equipped with an explosion-proof, watertight solenoid enclosure, the electrical fittings must be approved for use in the approved hazardous locations. Housings for all solenoids are made with connections for 1/2 inch conduit. The general purpose enclosure may be rotated to facilitate wiring by removing the retaining cap.

NOTE:
Alternating Current (A-C) and Direct Current (D-C) solenoids are built differently. To convert from one to other, it is necessary to change the complete solenoid, including the core assembly.

SOLENOID TEMPERATURE
Standard catalog valves are supplied with coils designed for continuous duty service. When the solenoid is energized for a long period, the solenoid enclosure becomes hot and can be touched with the bare hand for only an instant. This safe operating temperature. Any excessive heating will be indicated by the smoke and odor of burning coil insulation.

MAINTENANCE
Warning: Turn off electrical power and line pressure to valve before making repairs. It is not necessary to remove valve from pipe line for repairs.

CLEANING
A periodic cleaning of all valves is desirable. The time between cleanings will vary, depending on the media and service conditions. In general, if the voltage to the coils is correct, sluggish valve operation or excessive leakage will indicate that cleaning is required.

IMPROPER OPERATION
1. **Faulty Control Circuit:** Check the electrical system by energizing the solenoid. A metallic click signifies the solenoid is operating. Absence of the click indicate loss of power supply. Check for loose or blown-out fuses, open-circuited or grounded coil, broken lead wires or splice.
2. **Burned-out Coil:** Check for open-circuited coil. Replace coil, if necessary.
3. **Low Voltage:** Check voltage across coil leads. Voltage must be at least 85% of nameplate ratings.
4. **Incorrect Pressure:** Check valve pressure. Pressure to valve must be within the range specified on nameplate.
5. **Excessive Leakage:** Disassemble valve and clean all parts. Replace parts that are worn or damaged with a complete Spare Parts Kit for best results.

COIL REPLACEMENT (REF. FIG. 2)
Turn off electrical power, disconnect coil lead wires and proceed as follows:
1. Remove retaining cap, nameplate and cover.
2. Slip yoke containing coil, sleeves and insulating washers off the solenoid base sub-assembly. Insulating washers are omitted when molded coil is used. In some D.C. Constructions, a single flux plate over the coil replaces yoke, sleeves and insulating washers.
3. Reassemble in reverse order of disassembly.

© Copyright CLA-VAL - Specifications subject to change without notice.

VALVE DISASSEMBLY AND REASSEMBLY (REF. FIG. 2)

Turn off electrical power supply and de-pressurize valve.

1. Remove retaining cap and slip entire solenoid off solenoid base subassembly or plugnut/core tube sub-assembly.
2. Unscrew bonnet or solenoid base sub-assembly. Remove core assembly, core spring and body gasket.
3. Remove end cap, body gasket, disc spring, disc holder, disc or disc holder assembly.
4. All parts are now accessible for cleaning or replacement. Replace worn or damaged parts with a complete Spare Parts Kit for best results.
5. Reassemble in reverse order of disassembly paying careful attention to exploded view provided.

When Ordering, Please Specify

When Ordering Spare Parts Kits or Coils Specify Valve Catalog Number, Serial Number and Voltage

Spare Parts Kits and Coils are available for ASCO valves. Parts marked with

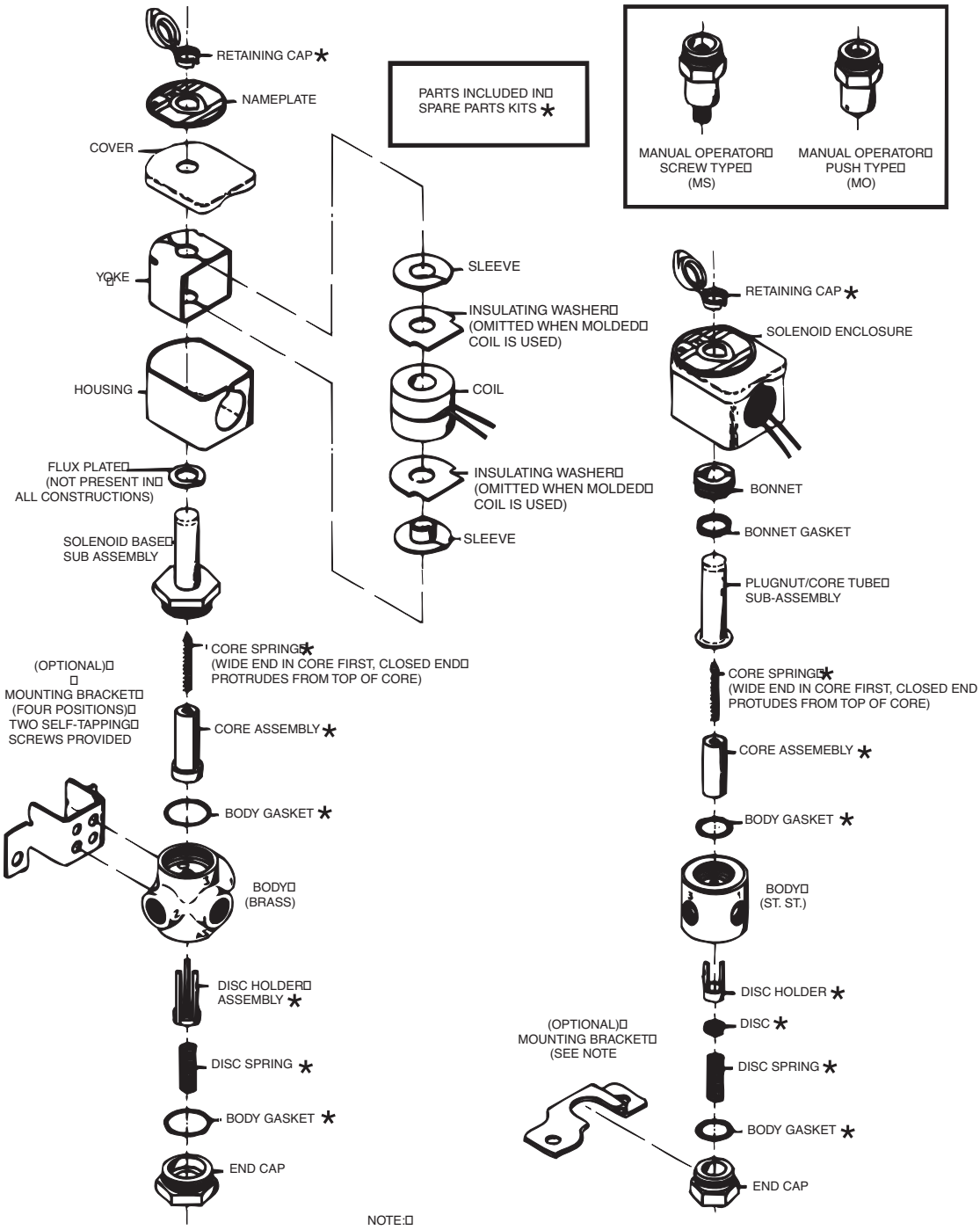

NOTE:
1. FOR MOUNTING, A FLAT SURFACE MUST BE PROVIDED ACROSS THE ENTIRE LENGTH OF THE BRACKET. THE VALVE BODY BECOMES SECURE TO BRACKET, WHEN BRACKET IS TIGHTENED IN TO POSITION. IF THE VALVE HAS A MANUAL OPERATOR, A HOLE MUST BE MADE THROUGH THE MOUNTING SURFACE FOR THE OPERATOR STEM.

© Copyright CLA-VAL - Specifications subject to change without notice.

BULLETIN 8016G ASCO FORM NO. V6583R5

OPEN-FLAME, GENERAL PURPOSE, WATERTIGHT/ EXPLOSIONPROOF SOLENOIDS

SERVICE NOTICE

ASCO ® solenoid valves with design change letter "G" in the catalog number (example: 8210G 1) have an epoxy encapsulated ASCO® Red Hat II. solenoid. This solenoid replaces some of the solenoids with metal enclosures and open-frame constructions. Follow these installation and maintenance instructions if your valve or operator uses this solenoid.

DESCRIPTION

Catalog numbers 8016G1 and 8016G2 are epoxy encapsulated pull-type solenoids. The green solenoid with lead wires and 1/2 " conduit connection is designed to meet Enclosure Type 1 -General Purpose,Type 2- Dripproof, Types 3 and 3S-Raintight, and Types 4 and 4X-Watertight. The black solenoid on catalog numbers prefixed "EF" is designed to meet Enclosure Types 3 and 3S-Raintight, Types 4 and 4X-Watertight, Types 6 and 6P-Submersible, type 7 (A, B, C, & D) Explosionproof Class 1, Division 1, Groups A, B, C, & D and Type 9 (E, F, & G)-Dust-Ignitionproof Class 11, Division 1, Groups E, F, & G. The Class 11, Groups F & G Dust Locations designation is not applicable for solenoids or solenoid valves used for steam service or when a class "H" solenoid is used. See Temperature Limitations section for solenoid identification and nameplate/ retainer for service. When installed just as a solenoid and not attached to an ASCO valve, the core has a 0.250-28 UNF-2B tapped hole, 0.38 minimum full thread.

SERIES 8016G SOLENOIDS ARE AVAILABLE IN

- **Open-Frame Construction:** The green solenoid may be supplied with 1/4 spade, screw, or DIN terminals (Refer to Figure 4).
- **Panel Mounted Construction:** These solenoids are specifically designed to be panel mounted by the customer through a panel having a 0.062 to 0.093 maximum wall thickness. (Refer to Figure 3 and section on Installation of Panel Mounted Solenoid).

OPTIONAL FEATURES FOR TYPE 1—GENERAL PURPOSE CONSTRUCTION ONLY

- **Junction Box:** This junction box construction meets Enclosure Types 2,3,3S,4, and 4X. Only solenoids with 1/4" spade or screw terminals may have a junction box. The junction box provides a 1/2 conduit connection, grounding and spade or screw terminal Connections within the junction box (See Figure 5).
- **DIN Plug Connector Kit No. K236 - 034:** Use this kit only for solenoids with DIN terminals. The DIN plug connector kit provides a two pole with grounding contact DIN Type 43650 construction (See Figure 6).

OPERATION

When the solenoid is energized, the core is drawn into the solenoid base subassembly.

IMPORTANT: When the solenoid is de-energized, the initial return force for the core, whether developed by spring, pressure, or weight, must exert a minimum force to overcome residual magnetism created by the solenoid. Minimum return force for AC construction is 11 ounces, and 4 ounces for DC construction.

INSTALLATION

Check nameplate for correct catalog number, service, and wattage. Check front of solenoid for voltage and frequency.

WARNING: To prevent the possibility of electrical shock from the accessibility of live parts, install the open-frame solenoid in an enclosure.

CAUTION: To prevent fire or explosion, do not install solenoid and/ or valve where ignition temperature is less than 165° C. On valves used for steam service or when a class "H" solenoid is used, do not install in hazardous atmosphere where ignition temperature is less than 180° C. See nameplate/retainer for service.

NOTE: These solenoids have an internal non-resetable thermal fuse to limit solenoid temperature in the event that extraordinary conditions occur which could cause excessive temperatures. These conditions include high input voltage, a jammed core, excessive ambient temperature or shorted solenoid, etc. This unique feature is a standard feature is a standard feature only in solenoids with black explosionproof/dust-ignitionproof enclosures (types 7 & 9).

IMPORTANT: To protect the solenoid valve or operator, install a strainer or filter, suitable for the service involved in the inlet side as close to the valve or operator as possible. Clean periodically depending on service condition & See ASCO Series 8600, 8601, and 8602 for strainers.

TEMPERATURE LIMITATIONS

For maximum valve ambient temperatures, refer to chart. The temperature limitations listed, only indicate maximum application temperatures for field wiring rated at 90°C. Check catalog number prefix and watt rating on nameplate to determine maximum ambient temperature. See valve installation and maintenance instructions for maximum fluid temperature.

Temperature Limitations For Series 8016G Solenoids for use Valves Rated at 6.1, 8.1,9.1,10.6 or 11.1 Watts

Watts Rating	Catalog Number Coil prefix	Class of Insulation	Maximum ambient Temp. °F
6.1, 8.1, 9.1, & 11.1	None, FB, KF, KP, SF, SP, SC, & SD	F	125
6.1, 8.1, 9.1, & 11.1	HB, HT, KB, KH, SS, ST, SU, & ST	H	140
10.6	None, KF, SF, & SC	F	104
10.6	HT, KH, SU, & ST	H	104
Minimum ambient temperature -40° F (-40° C).			

POSITIONING

This solenoid is designed to perform properly when mounted in any position. However, for optimum life and performance, the solenoid should be mounted vertically and upright to reduce the possibility of foreign matter accumulating in the solenoid base sub-assembly area.

WIRING

Wiring must comply with local codes and the National Electrical Code. All solenoids supplied with lead wires are provided with a grounding wire which is green or green with yellow stripes and a 1/2" conduit connection. To facilitate wiring, the solenoid may be rotated 360°. For the watertight and explosionproof solenoid, electrical fittings must be approved for use in the approved hazardous locations.

© Copyright CLA-VAL - Specifications subject to change without notice.

ADDITIONAL WIRING INSTRUCTIONS FOR OPTIONAL FEATURES:

- **Open-Frame solenoid with 1/4" spade terminals:** For solenoids supplied with screw terminal connections use #12-18 AWG stranded copper wire rated at 90°C or greater. Torque terminal block screws to 10 ± 2 in-lbs (1,0 + 1,2 Nm). A tapped hole is provided in the solenoid for grounding, use a #Y10-32 machine screw. Torque grounding screw to 15 -20 in-lbs (1,7 - 2,3 Nm). On solenoids with screw terminals, the socket head screw holding the terminal block to the solenoid is the grounding screw. Torque the screw to 15 - 20 in-lbs (1,7 - 2,3 Nm). with a 5/32" hex key wrench.
- **Junction Box:** The junction box is used with spade or screw terminal solenoids only and is provided with a grounding screw and a 1/2" conduit connection. Connect #12-18AWG standard copper wire only to the screw terminals. Within the junction box use field wire that is rated 90°C or greater for connections. For steam service use 105°C rated wire up to 50 psi or use 125°C rated wire above 50 psi. After electrical hookup, replace cover gasket, cover, and screws. Tighten screws evenly in a crisscross manner.
- **DIN Plug Connector Kit No. KC236-034:**

1. The open—frame solenoid is provided with DIN terminals to accommodate the DIN plug connector kit.
2. Remove center screw from plug connector. Using a small screwdriver, pry terminal block from connector cover.
3. Use #12-18 AWG stranded copper wire rated at 90°C or greater for connections. Strip wire leads back approximately 1/4" for installation in socket terminals. The use of wire-end sleeves is also recommended for these socket terminals. Maximum length of wire-end sleeves to be approximately 1/4". Tinning of the ends of the lead wires is not recommended.
4. Thread wire through gland nut, gland gasket, washer, and connector cover.

NOTE: Connector cover may be rotated in 90° increments from position shown for alternate positioning of cable entry.

5. Check DIN connector terminal block for electrical markings. Then make electrical hookup to terminal block according to markings on it. Snap terminal block into connector cover and install center screw.
6. Position connector gasket on solenoid and install plug connector. Torque center screw to 5 ± 1 in-lbs (0,6 ± 1,1 Nm).

NOTE: Alternating current (AC) and direct current (DC) solenoids are built differently. To convert from one to the other, it may be necessary to change the complete solenoid including the core and solenoid base subassembly, not just the solenoid. Consult ASCO.

INSTALLATION OF SOLENOID

Solenoids may be assembled as a complete unit. Tightening is accomplished by means of a hex flange at the base of the solenoid. The 3/4" bonnet construction (Figure 1) must be disassembled for installation and installed with a special wrench adapter.

INSTALLATION OF PANEL MOUNTED SOLENOID

(See Figure 3) Disassemble solenoid following instruction under Solenoid Replacement then proceed

- **3/4" Valve Bonnet Construction**

1. Install retainer (convex side to solenoid) in 1.312 diameter mounting hole in customer panel.
2. Then position spring washer over plugnut/core tube sub-assembly.
3. Install plugnut/core tube sub-assembly through retainer in customer panel. Then replace solenoid, nameplate/retainer and red cap.

- **3/4" Valve Bonnet Construction**

1. Install solenoid base sub-assembly through 0.69 diameter mounting hole in customer panel.
2. Position spring washer on opposite side of panel over solenoid base sub-assembly then replace.

- **Solenoid Temperature:** Standard solenoids are designed for continuous duty service. When the solenoid is energized for a long period, the solenoid becomes hot and can be touched by hand only for an instant. This is a safe operating temperature.

MAINTENANCE

WARNING: To prevent the possibility of personal injury or property damage, turn off electrical power, depressurize solenoid operator and/or valve, and vent fluid to a safe area before servicing.

CLEANING

All solenoid operators and valves should be cleaned periodically. The time between cleaning will vary depending on medium and service conditions. In general, if the voltage to the solenoid is correct, sluggish valve operation, excessive noise or leakage will indicate that cleaning is required. Clean strainer or filter when cleaning the valve.

PREVENTIVE MAINTENANCE

- Keep the medium flowing through the solenoid operator or valve as free from dirt and foreign material as possible.
- While in service, the solenoid operator or valve should be operated at least once a month to ensure proper opening and closing.
- Depending on the medium and service conditions, periodic inspection of internal valve parts for damage or excessive wear is recommended. Thoroughly clean all parts. Replace any worn or damaged parts.

CAUSES OF IMPROPER OPERATION

- **Junction Box:** Check the electrical system by energizing the solenoid. A metallic click signifies that the solenoid is operating. Absence of the click indicates loss of power supply. Check for loose or blown fuses, open-circuited or grounded solenoid, broken lead wires or splice connections.
- **Burned-Out Solenoid:** Check for open-circuited solenoid. Replace if necessary. Check supply voltage; it must be the same as specified on nameplate/retainer and marked on the solenoid. Check ambient temperature and check that the core is not jammed.
- **Low Voltage:** Check voltage across the solenoid leads. Voltage must be at least 85% of rated voltage.

SOLENOID REPLACEMENT

1. On solenoids with lead wires disconnect conduit, coil leads, and grounding wire.

NOTE: Any optional parts attached to the old solenoid must be reinstalled on the new solenoid.

2. Disassemble solenoids with optional features as follows:

- **Spade or Screw Terminals:** Remove terminal connections, grounding screw, grounding wire, and terminal block (screw terminal type only).

NOTE: For screw terminals, the socket head screw holding the terminal block serves as a grounding screw.

- **Junction Box:** Remove conduit and socket head screw (use 5132" hex key wrench) from center of junction box. Disconnect junction box from solenoid.
- **DIN Plug Connector:** Remove center screw from DIN plug connector. Disconnect DIN plug connector from adapter. Remove socket head screw (use 5/32" hex key wrench), DIN terminal adapter, and gasket from solenoid.

3. Snap off red cap from top of solenoid base sub-assembly
4. Push down on solenoid. Then using a suitable screwdriver, insert blade in slot provided between solenoid and nameplate/retainer. Pry up slightly and push to remove. Then remove solenoid from solenoid base sub-assembly.
5. Reassemble using exploded views for parts identification and placement

© Copyright CLA-VAL - Specifications subject to change without notice.

DISASSEMBLY AND REASSEMBLY OF SOLENOIDS

1. Remove solenoid, see Solenoid Replacement.
2. Remove finger washer or spring washer from solenoid base sub-assembly.
3. Unscrew solenoid base sub-assembly.

NOTE: Some solenoid constructions have a plugnut/core tube sub-assembly, bonnet gasket and bonnet in place of the solenoid base sub-assembly. To remove bonnet use special wrench adapter supplied in ASCO Rebuild Kit. For wrench adapter only, order ASCO Wrench Kit No.K218 - 948.

4. The core is now accessible for cleaning or replacement.
5. If the solenoid is part of a valve, refer to basic valve installation and maintenance instructions for further disassembly.
6. Reassemble using exploded views for identification and placement of parts.

When Ordering, Please Specify

When Ordering Solenoids for ASCO Solenoid Operators or Valves, order the number stamped on the solenoid. Also specify voltage and frequency.

Torque Chart		
Part Name	Torque Value in inch-Pounds	Torque Value in Newton-Meters
Solenoid base sub-assembly	175 ± 25	19.8 ± 2.8
Valve bonnet (3/4” bonnet constructions)	90 ± 10	10.2 ± 1.1
Bonnet screw (3/8” or 1/2” NPT pipe size)	25	2.8
Bonnet screw (3/4” NPT pipe size)	40	4.5

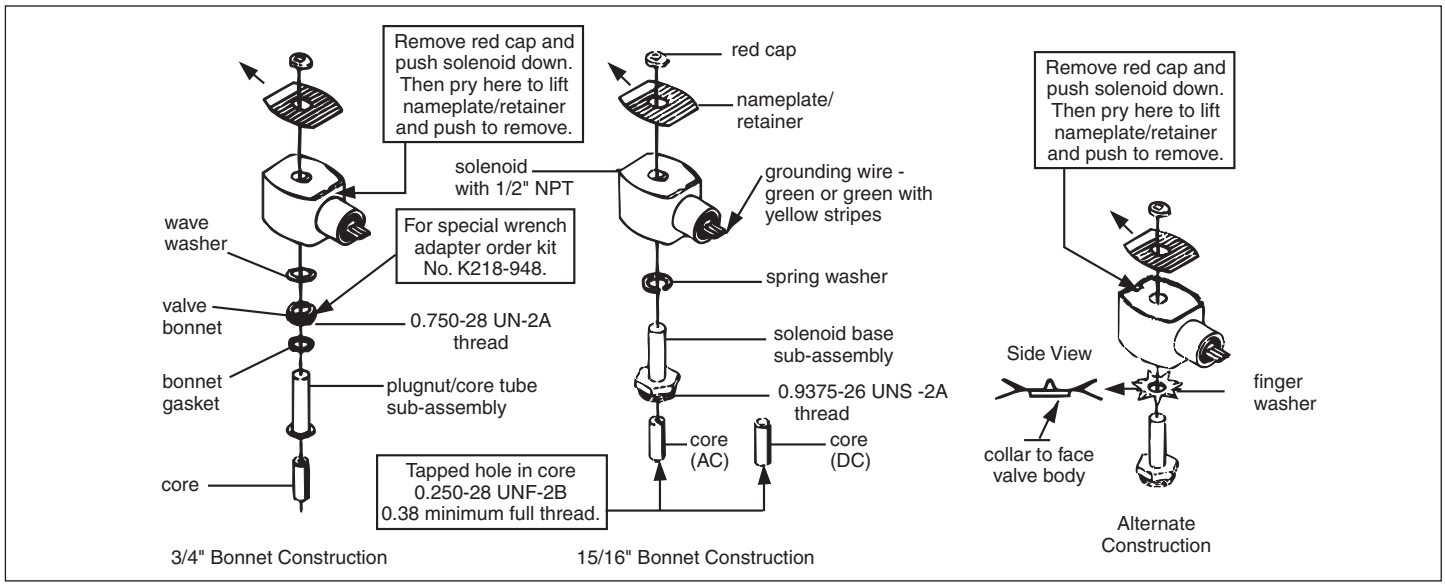

Figure 1. Series 8016G solenoids

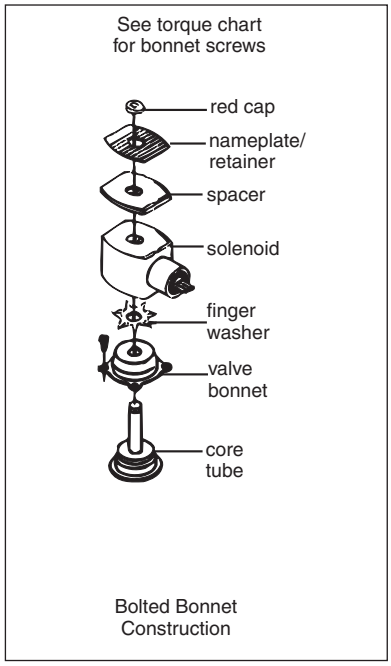

Figure 2. Series 8016G solenoid

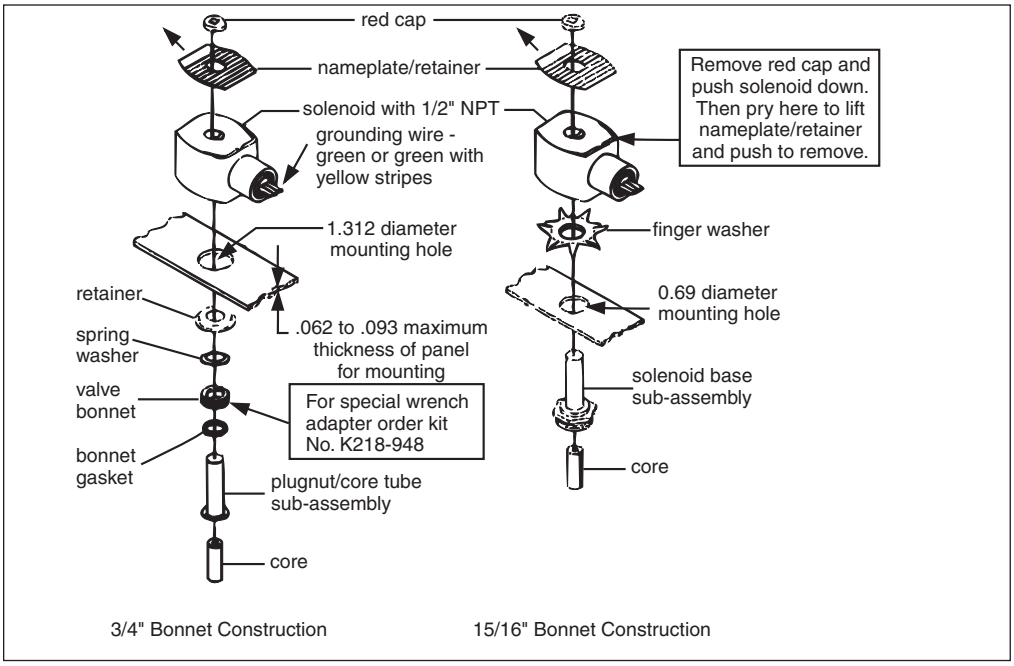

Figure 3. Series 8016G panel mounted solenoids

© Copyright CLA-VAL - Specifications subject to change without notice.

Torque Chart		
Part Name	Torque Value in inch-Pounds	Torque Value in Newton-Meters
Terminal block screws	10 ± 2	1,1 ± 0,2
Socket head screw	15 - 20	1,7 - 2,3
Center screw	5 ± 1	0,6 ± 0,1

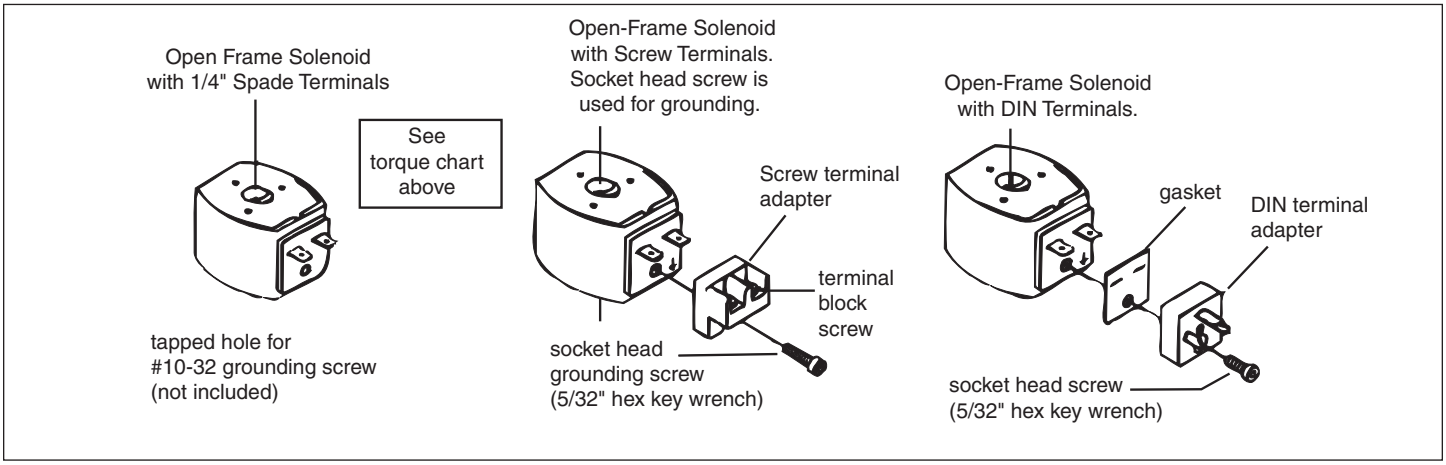

Figure 4. Open - frame solenoids

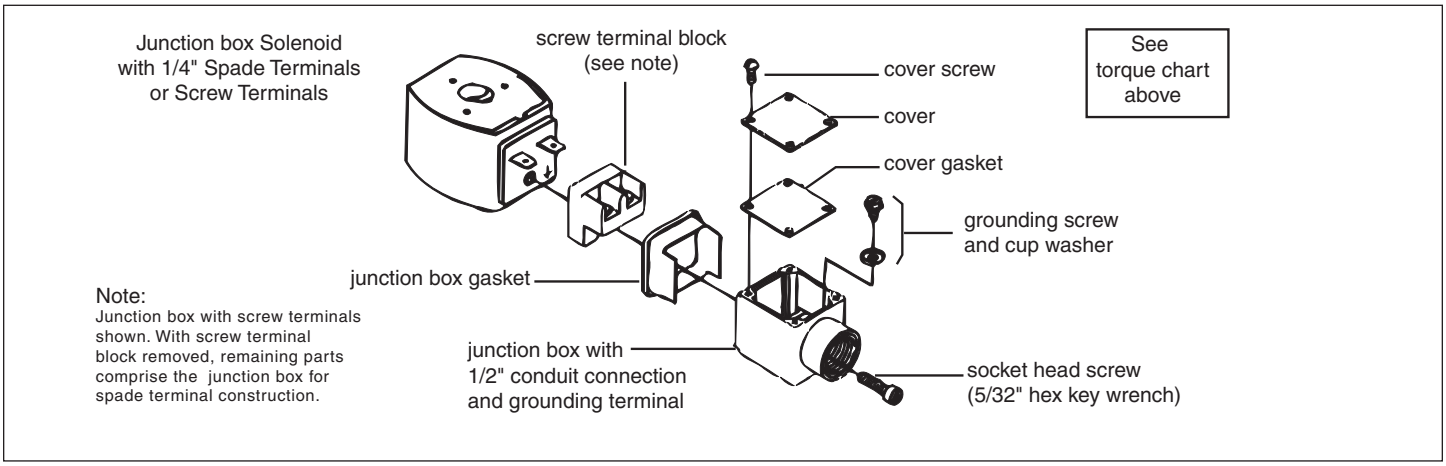

Figure 5. Open - frame solenoids

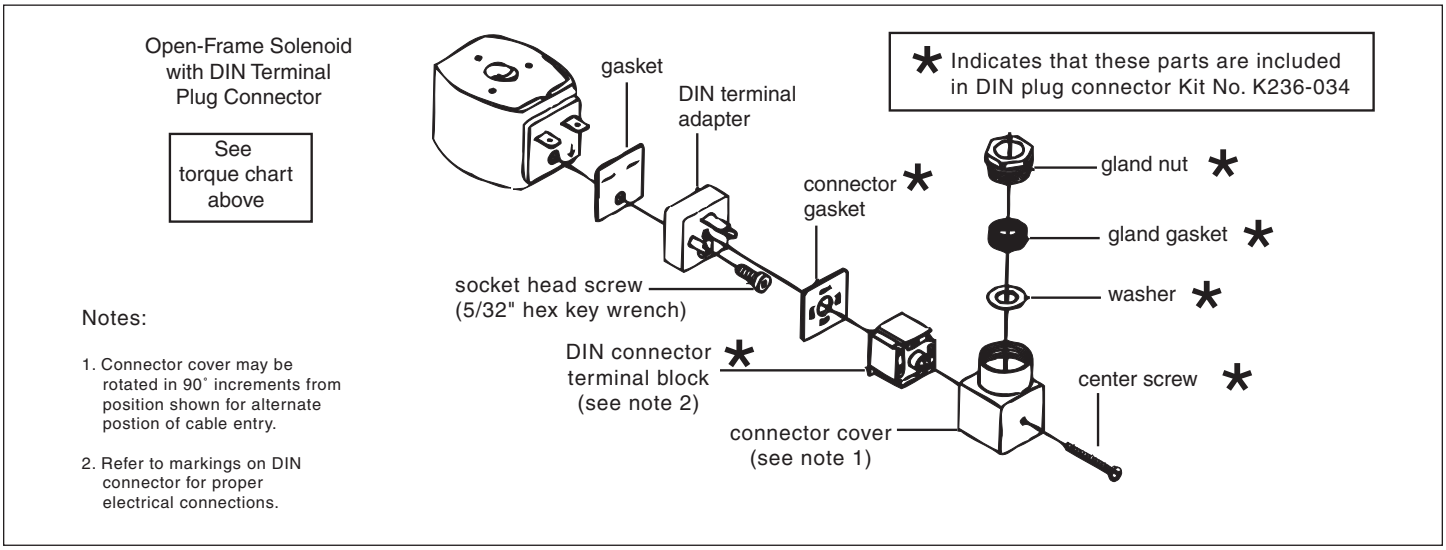

© Copyright CLA-VAL - Specifications subject to change without notice.

CVCL 1 2 3 4 DIST. CODE 007A SHEET 1 OF 1

CLA-VAL CO. NEWPORT BEACH, CALIFORNIA	CATALOG NO. CSC	DRAWING NO. 92667	REV. A

TYPE OF VALVE AND MAIN FEATURES

CSC SWING CHECK VALVE

DESIGN		
DRAWN	CH	11-5-76
CHK'D	MF	11-8-76
APV'D	JAZ	11-9-76

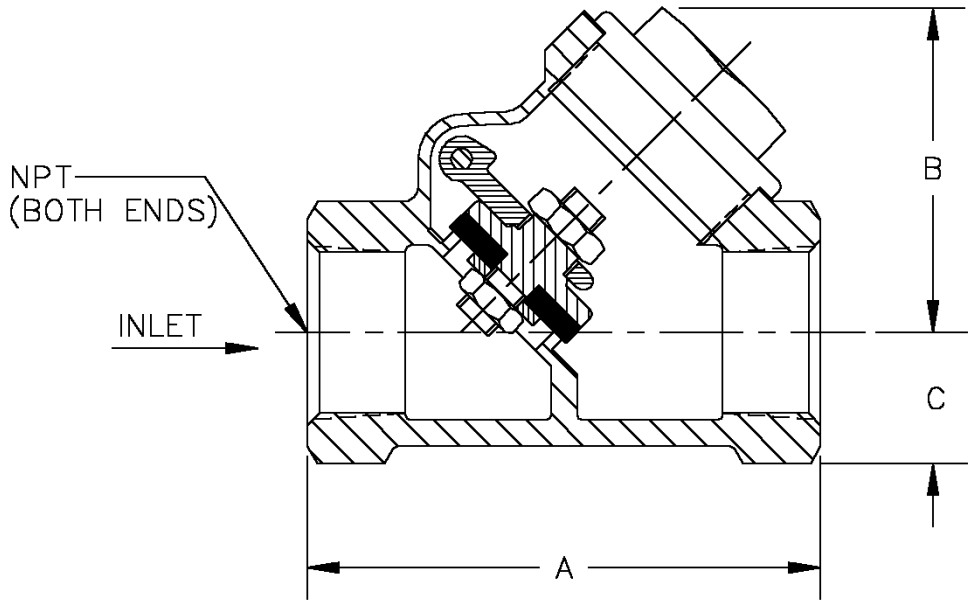

PIPE SIZE NPT	A	B	C
.25 (1/4)	2.13	1.63	.50
.38 (3/8)	2.13	1.63	.50
.50 (1/2)	2.44	1.69	.63
.75 (3/4)	2.94	1.88	.75
1.00 (1)	3.19	2.09	.94

CAD REVISION RECORD – DO NOT REVISE MANUALLY

LTR	DESCRIPTION	BY	DATE
A	REDRAWN ON CAD (ECO 14229)	EK	11-15-93

"THIS DRAWING IS THE PROPERTY OF CLA-VAL CO. AND SAME AND COPIES MADE THEREOF, IF ANY, SHALL BE RETURNED TO IT UPON DEMAND. DELIVERY AND DISCLOSURE HEREOF ARE SOLELY UPON CONDITION THAT THE SAME SHALL NOT BE USED, COPIED OR REPRODUCED, NOR SHALL THE SUBJECT HEREOF BE DISCLOSED IN ANY MANNER TO ANYONE FOR ANY PURPOSE, EXCEPT AS HEREIN AUTHORIZED, WITHOUT PRIOR WRITTEN APPROVAL OF CLA-VAL CO. THIS DRAWING IS SUBMITTED CONFIDENTIALLY AND MAY NOT BE USED IN THE MANUFACTURE OF ANY MATERIAL OR PRODUCT OTHER THAN SUCH MATERIALS AND PRODUCTS FURNISHED TO CLA-VAL CO. WHETHER OR NOT THE EQUIPMENT OR INFORMATION SHOWN HEREON IS PATENTED OR OTHERWISE PROTECTED, FULL TITLE AND COPYRIGHTS, IF ANY, IN AND TO THIS DRAWING AND/OR INFORMATION DELIVERED OR SUBMITTED ARE FULLY RESERVED CLA-VAL CO."

Model CV
FLOW CONTROL

DESCRIPTION
The CV Control is an adjustable restriction which acts as a needle valve when flow is in the direction of the stem. When flow is in the reverse direction, the port area opens fully to allow unrestricted flow. When installed in the control system of a Cla-Val automatic valve, it can be arranged to function as either an opening or closing speed control.

OPERATION
The CV Flow Control permits full flow from port A to B, and restricted flow in the reverse direction. Flow from port A to B lifts the disc from seat, permitting full flow. Flow in the reverse direction seats the disc, causing fluid to pass through the clearance between the stem and the disc. This clearance can be increased, thereby increasing the restricted flow, by screwing the stem out, or counter-clockwise. Turning the stem in, or clockwise reduces the clearance between the stem and the disc, thereby reducing the restricted flow.

INSTALLATION
Install the CV Flow Control as shown in the valve schematic. All connections must be tight to prevent leakage.

DISASSEMBLY
Follow the sequence of the item numbers assigned to the parts in the cross sectional illustration for recommended order of disassembly.

Use a scriber, or similar sharp-pointed tool to remove O-ring from the stem.

INSPECTION
Inspect all threads for damage or evidence of cross-threading. Check mating surface of seat and valve disc for excessive scoring or embedded foreign particles. Check spring for visible distortion, cracks and breaks. Inspect all parts for damage, corrosion and cleanliness.

CLEANING
After disassembly and inspection, cleaning of the parts can begin. Water service usually will produce mineral or lime deposits on metal parts in contact with water. These deposits can be cleaned by dipping the parts in a 5-percent muriatic acid solution just long enough for deposits to dissolve. This will remove most of the common types of deposits. **CAUTION: Use extreme care when handling acid.** If the deposit is not removed by acid, then a fine grit (400) wet or dry sandpaper can be used with water. Rinse parts in water before handling. An appropriate solvent can clean parts used in fueling service. Dry with compressed air or a clean, lint-free cloth. Protect from damage and dust until reassembled.

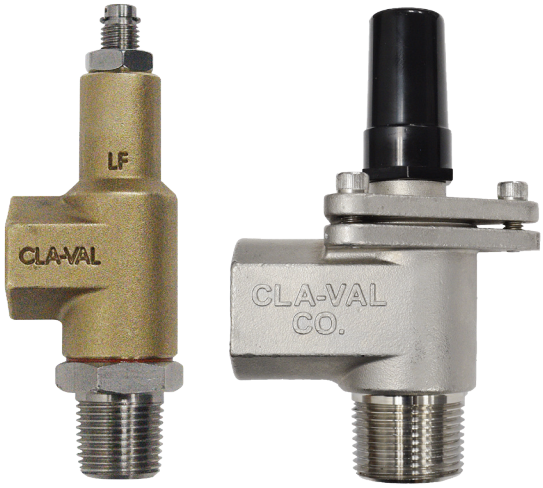

REPAIR AND REPLACEMENT
Minor nicks and scratches may be polished out using a fine grade of emery or crocus cloth; replace parts if scratches cannot be removed.

Replace O-ring packing and gasket each time CV Flow Control is overhauled.

Replace all parts which are defective. Replace any parts which create the slightest doubt that they will not afford completely satisfactory operation. Use Inspection steps as a guide.

REASSEMBLY
Reassembly is the reverse of disassembly; no special tools are required.

TEST PROCEDURE
No testing of the flow Control is required prior to reassembly to the pilot control system on Cla-Val Main Valve.

© Copyright CLA-VAL - Specifications subject to change without notice.

Model CV
FLOW CONTROL

PARTS LIST

3/8" CV Flow Control

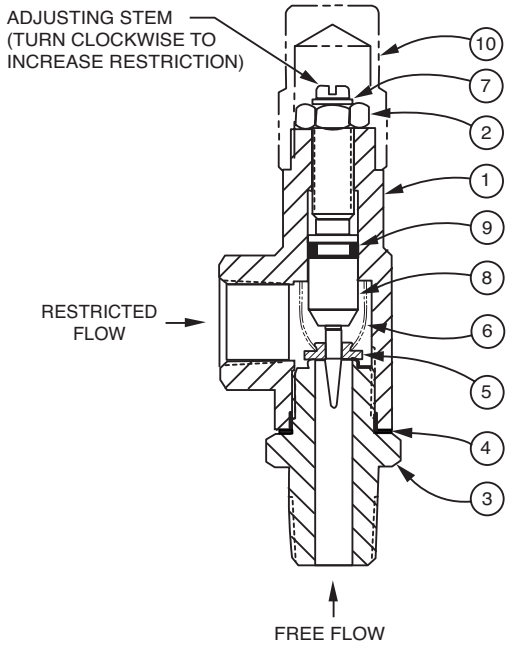

Item No.	Description	QTY
1	Housing	1
2	Nut, Jam	1
3	Seat	1
4	Gasket	1
5	Disc	1
6	Spring	1
7	Ring, Retaining	1
8	Stem	1
9	O-Ring	1
10	Cap (SS only)	1

1/2", 3/4", and 1" CV Flow Control

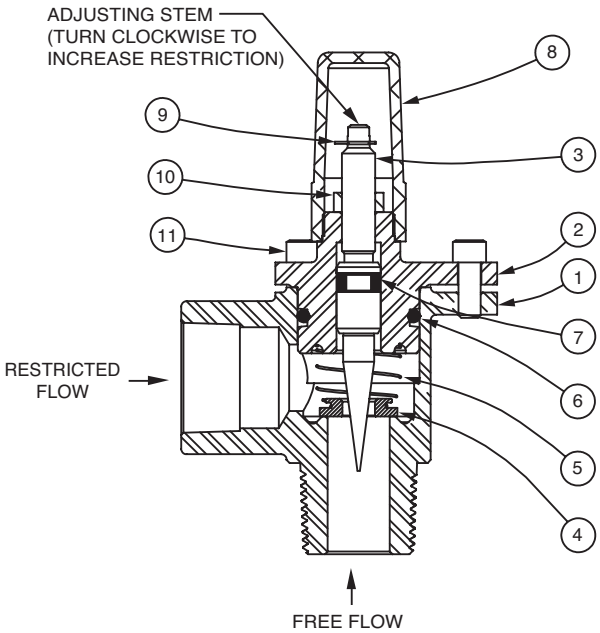

Item No.	Description	QTY
1	Body	1
2	Cover	1
3	Stem	1
4	Disc	1
5	Spring	1
6	O-Ring	1
7	O-Ring	1
8	Cap	1
9	Ring, Retaining	1
10	Nut, Jam	1
11	Socket Head Cap Screw	3

When Ordering, Please Specify

1. All Nameplate/Stamped data
2. Item Number
3. Description
4. Material

© Copyright CLA-VAL - Specifications subject to change without notice.

Model X46
PRESSURE REDUCING CONTROL

- Self Scrubbing Cleaning Action
- Straight Type or Angle Type

The Cla-Val Model X46 Strainer is designed to prevent passage of foreign particles larger than 0.015”. It is especially effective against such contaminant as algae, mud, scale, wood pulp, moss, and root fibers. There is a model for every Cla-Val valve.

The X46 Flow Clean strainer operates on a velocity principle utilizing the circular “air foil” section to make it self cleaning. Impingement of particles is on the “leading edge” only. The low pressure area on the downstream side of the screen prevents foreign particles from clogging the screen. There is also a scouring action, due to eddy currents, which keeps most of the screen area clean.

Model X46A Straight

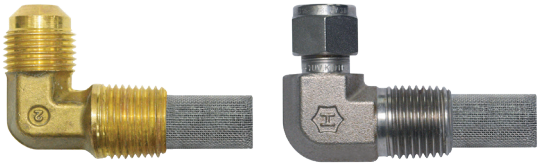

Model X46B Angle

INSTALLATION
The strainer is designed for use in conjunction with a Cla-Val Main Valve, but can be installed in any piping system where there is a moving fluid stream to keep it clean. When it is used with the Cla-Val Valve, it is threaded into the upstream body port provided for it on the side of the valve. It projects through the side of the Main Valve into the flow stream. All liquid shunted to the pilot control system and to the cover chamber of the Main Valve passes through the Model X46 Flow Clean Strainer.

INSPECTION
Inspect internal and external threads for damage or evidence of cross-threading. Check inner and outer screens for clogging, embedded foreign particles, breaks, cracks, corrosion, fatigue, and other signs of damage.

DISASSEMBLY
Do not attempt to remove the screens from the strainer housing.

CLEANING
After inspection, cleaning of the Model X46 can begin. Water service usually will produce mineral or lime deposits on metal parts in contact with water. These deposits can be cleaned by dipping Model X46 in a 5-percent muriatic acid solution just long enough for deposit to dissolve. This will remove most of the common types of deposits.

CAUTION: use extreme care when handling acid. If the deposit is not removed by acid, then a fine grit (400) wet or dry sandpaper can be used with water. Rinse parts in water before handling. An appropriate solvent can clean parts used in fueling service. Dry with compressed air or a clean, lint-free cloth.

Protect from damage and dust until reassembled.

REPLACEMENT
If there is any sign of damage, or if there is the slightest doubt that the Model X46 Flow Clean Strainer may not afford completely satisfactory operation, replace it. Use Inspection steps as a guide. Neither inner screen, outer screen, nor housing is furnished as a replacement part. Replace Model X46 Flow Clean Strainer as a complete unit.

When ordering replacement Flow-Clean Strainers, it is important to determine pipe size of the tapped hole into which the strainer will be inserted (refer to column A or F), and the size of the external connection (refer to column B or G).

© Copyright CLA-VAL - Specifications subject to change without notice.

Dimensions (in Inches)

X46 Straight Type A (In Inches)						
A (NPT)	**C** (NPT)	**D**	**E**	**F**	**G**	**I**
1/8	1/8	1-3/4	3/4	1/2	1/2	1/4
1/4	1/4	2-1/4	1	3/4	3/4	3/8
3/8	3/8	2-1/2	1	7/8	7/8	1/2
3/8	1/2	2-1/2	1-1/4	1/2	7/8	3/4
1/2	1/2	3	1-1/4	1	1-1/8	3/4
3/8	3/4	3-3/8	2	1/2	1	7/8
3/4	3/4	4	2	1	1-1/2	7/8
3/8	1	4-1/4	2-3/4	1/2	1-3/8	7/8
1	1	4-1/2	2-3/4	1-1/4	1-3/4	7/8
1/2	1	4-1/4	2-3/4	1/2	1-3/8	7/8

X46 Angle Type B (In Inches)					
B (NPT)	**C** (SAE)	**D**	**E**	**H**	**I**
1/8	1/4	1-3/8	5/8	7/8	1/4
1/4	1/4	1-3/4	3/4	1	3/8
3/8	1/4	2	7/8	1	1/2
3/8	3/8	1-7/8	7/8	1	1/2
1/2	3/8	2-3/8	1	1-1/4	5/8

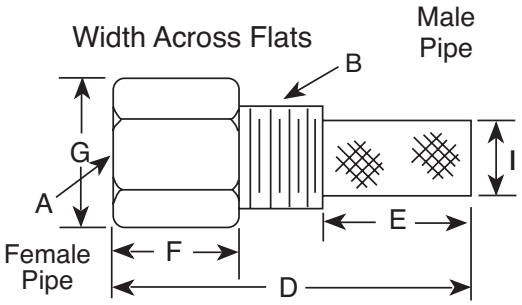

Model X46A

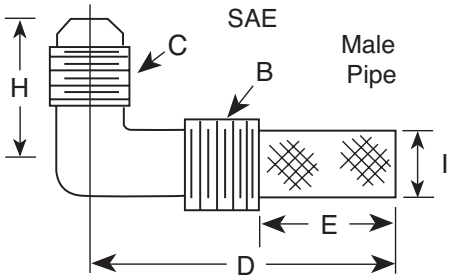

Model X46B

When Ordering, Please Specify

1. Catalog number X46
2. Straight or Angel Type
3. Size inserted into and size connection
4. Materials

© Copyright CLA-VAL - Specifications subject to change without notice.

CLA-VAL CO. NEWPORT BEACH, CALIFORNIA

CATALOG NO.	DRAWING NO.	REV
	67783	BD

TYPE OF VALVE AND MAIN FEATURES

CK2 COCK/BALL VALVE

DESIGN		
DRAWN	MGR	4-02-80
CHK'D	KD	4-03-80
APV'D	CH	4-07-80

SCALE: NONE

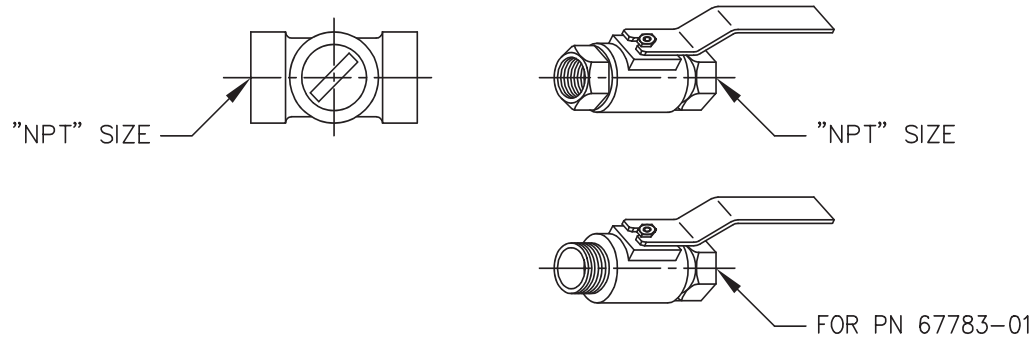

CLA-VAL PART NO. AND MATERIAL

BRONZE WITH HANDLE	STEEL WITH HANDLE	IRON WITH HANDLE	316 SST WITH HANDLE	316 SST W/ LOCKING HANDLE	BRONZE WITH HANDLE	MONEL WITH HANDLE	MONEL W/ LOCKING HANDLE	SIZE "NPT"
67783-01K*	-09C	-17F	-25J SUPSD BY-26G		-41F SUPSD BY-01K			1/8"
-02H	-10A	-18D	-26G	-51E SUPSD BY-26G -52C	-42D SUPSD BY-02H	-55F		1/4"
-03F* -59H***	-11J	-19B	-27E	-46E SUPSD BY-27E -53A	-45G -57B**	-48A SUPSD BY-49J	-63K	3/8"
-04D -60F ***	-12G	-20K	-28C	-54J	-43B SUPSD BY-04D	-49J	-62B	1/2"
-05A -61D ***	-13E	-21H	-29A	-64H	-44K SUPSD BY-05A	-56D		3/4"
-06J	-14C	-22F	-30J			-58K		1"
-07G	-15K	-23D	-31G					1 1/4"
-08E	-16H	-24B	-32E					1 1/2"
-50G			-47C					2"

* SEE ENGINEERING APPROVED VENDORS TABLE (SHEET 2 OF 2).

** HAMMOND VALVE 8501 ONLY.

*** WILKINS CK2 (SEE SHEET 2 OF 2)

CAD REVISION RECORD – DO NOT REVISE MANUALLY

LTR	DESCRIPTION	BY	DATE
A-AY	SEE REVISION FILE		
BA	ADDED PN'S 67783-59H, 67783-60F & 67783-61D (ECO 20434)	AK	03-14-06
BB	ADDED PN'S 67783-62B (NED 62200)	AK	07-10-08
BC	ADDED PN'S 67783-63K (NED 62218)	AK	08-14-08
BD	ADDED PN 67783-64H (NED 62446)	PC	10-1-2008

"THIS DRAWING IS THE PROPERTY OF CLA-VAL CO. AND SAME AND COPIES MADE THEREOF, IF ANY, SHALL BE RETURNED TO IT UPON DEMAND. DELIVERY AND DISCLOSURE HEREOF ARE SOLELY UPON CONDITION THAT THE SAME SHALL NOT BE USED, COPIED OR REPRODUCED, NOR SHALL THE SUBJECT HEREOF BE DISCLOSED IN ANY MANNER TO ANYONE FOR ANY PURPOSE, EXCEPT AS HEREIN AUTHORIZED, WITHOUT PRIOR WRITTEN APPROVAL OF CLA-VAL CO. THIS DRAWING IS SUBMITTED CONFIDENTIALLY AND MAY NOT BE USED IN THE MANUFACTURE OF ANY MATERIAL OR PRODUCT OTHER THAN SUCH MATERIALS AND PRODUCTS FURNISHED TO CLA-VAL CO. WHETHER OR NOT THE EQUIPMENT OR INFORMATION SHOWN HEREON IS PATENTED OR OTHERWISE PROTECTED, FULL TITLE AND COPYRIGHTS, IF ANY, IN AND TO THIS DRAWING AND/OR INFORMATION DELIVERED OR SUBMITTED ARE FULLY RESERVED CLA-VAL CO."

Model **PL-CDC-1**

CHECK VALVE

SIZES 3/8”, 1/2”, 3/4”, AND 1”

PARTS LIST

- Meets Low Lead Requirements
- Patented Seal Design Allows for Drip Tight Shut-off at Low DP
- No Spring Required due to Patented Seal Design
- Delrin® Disc with Flow Profile Designed to Minimize Head Loss
- Delrin® Disc Resists Corrosion and/or Mineral Build-up
- Drip Tight Seating at both Low and High Operating Pressures
- Temperature Range: 10°F to 210°F
- EPR, NBR, and Fluorocarbon Seal Options

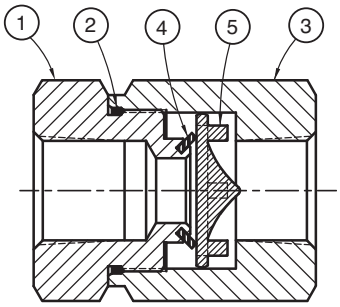

CLA–VAL CHECK VALVE CONFIG. (1/2” SIZE SHOWN)
(SCALE: 2/1)

CDC-1 3/8” and 1/2”		
Item No.	Description	QTY
1	Retainer, Seal	1
*2	O-Ring	1
3	Retainer, Valve	1
*4	Seal, Valve Ring	1
*5	Plate, Valve	1

*Included in Repair Kit

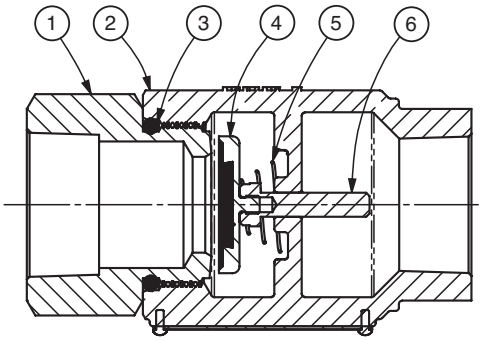

CDC-1 3/4” and 1”		
Item No.	Description	QTY
1	Seal, Valve	1
*2	Body, Valve	1
3	O-Ring	1
*4	Disc Retainer Assembly	1
*5	Spring	1
*6	Stem, Valve	1

*Included in Repair Kit

Dimensions

Size (NPT)	A	B	C
3/8”	2.06	1.06	0.38 (3/8”) - 18.0 NPT
1/2”	2.12	1.38	0.50 (1/2”) - 14.0 NPT
3/4”	4.06	2.26	0.75 (3/4”) - 14.0 NPT
1”	4.06	2.19	1.00 (1”) - 11.5 NPT

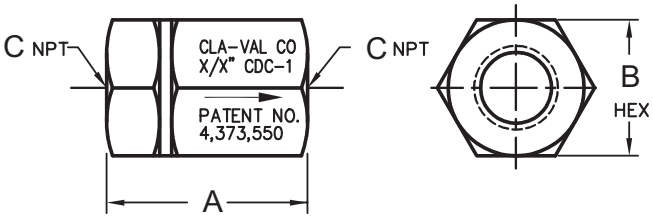

CLA–VAL CHECK VALVE (1/2” SIZE SHOWN)

When Ordering, Please Specify

1. All Nameplate data
2. Item Number
3. Description
4. Material

© Copyright CLA-VAL - Specifications subject to change without notice.

Model **RGT**

RESERVOIR GAUGE WITH TESTER

ENGINEERING DATA SHEET

Completely Automatic Operation

The Cla-Val Model RGT Reservoir Gauge with Tester is an option for testing of the 200 Series Altitude Automatic Valve.

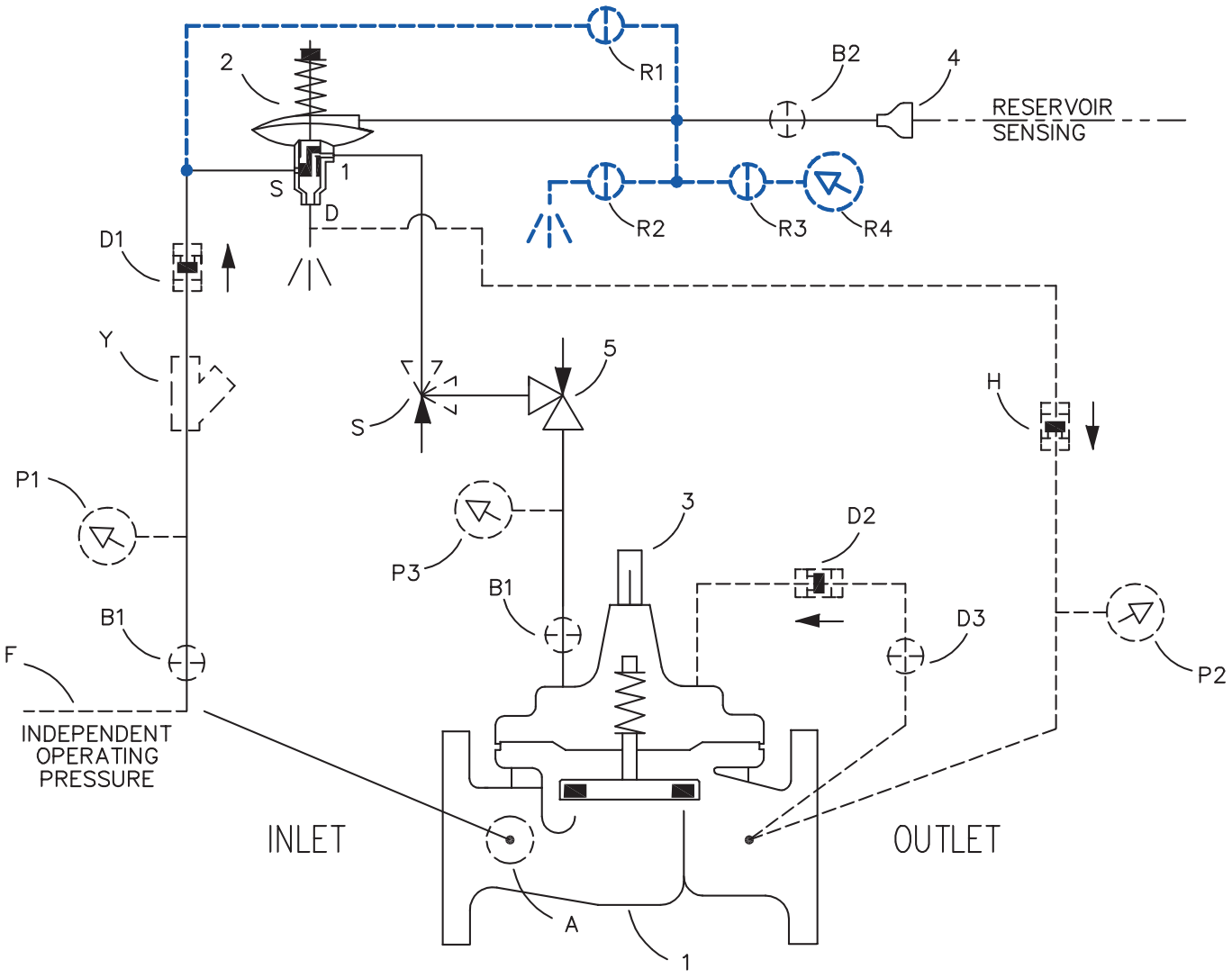

© Copyright CLA-VAL - Specifications subject to change without notice.

Model X43
STRAINER

PARTS LIST

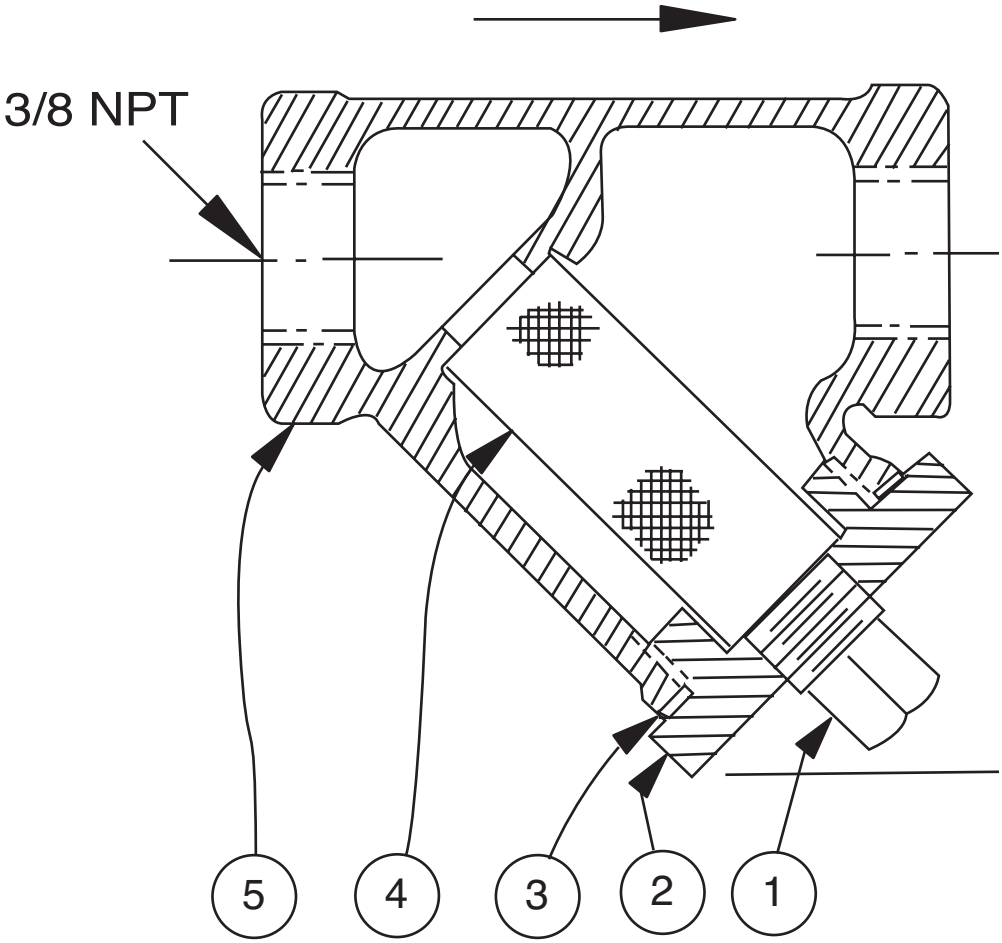

Standard 60 mesh pilot system strainer for fluid service.

Size	Stock Number
3/8” x 3/8”	8850604D

Item No.	Description	Material
1	Pipe Plug	Stainless Steel
2	Strainer Plug	Stainless Steel
3	Gasket	Fiber
4	Screen	Stainless Steel
5	Body	Stainless Steel
No parts available. Replacement assembly only.		

When Ordering, Please Specify

1. All Nameplate data
2. Item Number
3. Description
4. Material

© Copyright CLA-VAL - Specifications subject to change without notice.

Technical Bulletin

CDS6 Improvements

Recently, our Engineering Department redesigned a few internal parts of the CDS6 Pilot Control used on 210 Series Altitude Valves. These new parts improve its sensitivity at high differential pressures and allow it to work with inlet supply pressures up to 200 psi (previous maximum recommended pressure was 150 psi). The new control is identified as CDS6A and new part numbers are assigned to distinguish it from the original CDS6. Adjustment ranges remain the same.

New parts inside the CDS6A are a) stem seals, b) disc and poppet assembly, c) lower stem, d) lower cover, e) poppet guide, and f) poppet spring. The CDS6A uses new low-friction seals on the lower stem and the disc and poppet assembly. Also, the new stem and poppet have a special low-friction nickel-Teflon coating and are dimensionally interchangeable with CDS6 parts. The new lower cover and poppet guide have larger internal dimensions for the new seals and are not interchangeable with CDS6 parts. Also, the poppet spring has a heavier load and is not interchangeable. All other parts remain the same.

All bills of material for top assemblies using the CDS6 have been changed to the new control. It will take some time for us to change assembly drawings and deplete existing parts before we begin using the CDS6A. We plan to finalize the change during first quarter of 2003.

A new CDS6A repair kit is pin 20349401 C and will not work with existing CDS6 controls. The repair kit will include instructions and tools to install new stem seals. When servicing existing CDS6 controls the current repair kit pin 20119301 A should be used.

A modification kit consisting of all new parts and instructions is pin 20354801 G. Field modification is recommended only for installations where it is determined to be necessary.

Range (ft)	size	p/n	size	p/n
5- 40	2-1/2" & larger	20354701K	2" & smaller	20354706E
30- 80	2-1/2" & larger	20354702J	2" & smaller	203547070
70 - 120	2-1/2" & larger	20354703H	2" & smaller	20354708C
110 - 160	2-1/2" & larger	20354704G	2" & smaller	203547098
150 - 200	2-1/2" & larger	20354705F	2" & smaller	20354710J

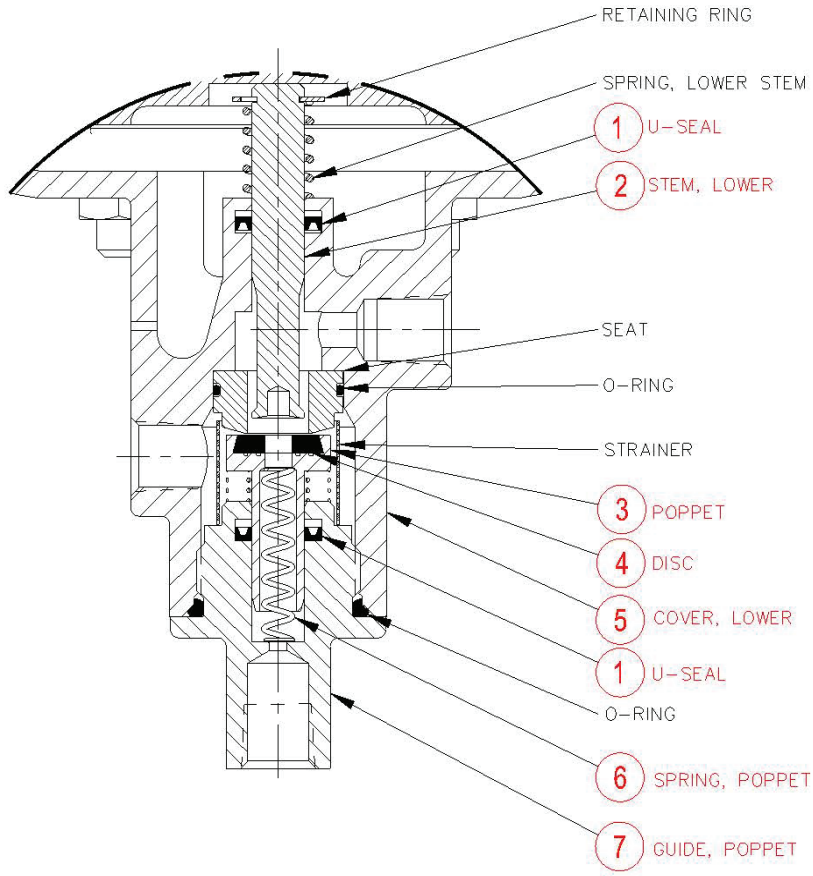

NEW CDS6A PARTS ARE ABOVE NUMBERED ITEMS.

A) All other parts are the same as current CDS6 parts.

B) Two new low-friction U-Seals, Item 1, will not fit into O-ring grooves of CDS6 lower cover and poppet guide. The machined groove dimensions are different between the O-ring version and the new U-seal version parts. New Lower Cover, Item 5, and Poppet Guide, Item 7, have proper dimensions for U-Seal.

C) Lower Stem, Item 2, and Poppet, Item 3, are dimensionally interchangeable with CDS6 parts that are now obsolete. These new parts have a special low-friction coating which may enhance CDS6 performance.

D) Poppet Spring, Item 6, has a heavier load rating and is not interchangeable with CDS6 poppet spring. Sensitivity will be greater than a 12" differential, if used in CDS6 controls.

Model CDS6B
ALTITUDE PILOT CONTROL

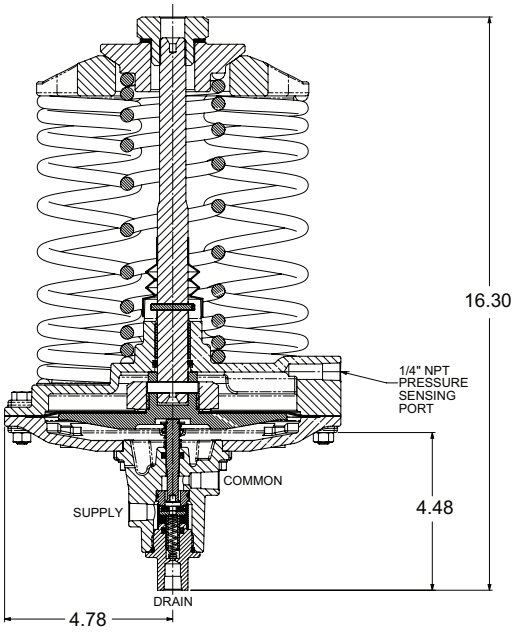

Dimensions

- Very Accurate and Reliable
- Low Maintenance
- Stainless Steel Wetted Parts

The Cla-Val Model CDS6B Altitude Pilot Control is a spring-loaded, three-way, diaphragm-actuated control that provides high-level shutoff for Cla-Val 210 Series Altitude Control Valves. Model CDS6B controls the high water level in a reservoir or tank without the need for floats or other devices. It is a non-throttling pilot that remains fully open until the reservoir reaches the high level shutoff point. High accuracy is assured by remotely sensing the pressure head of the reservoir or tank. The single adjusting nut can be easily set in the field to close the main valve when liquid level reaches the desired high level set-point within five adjustment ranges.

Model CDS6B operating principle uses a differential in forces between the spring load and the hydraulic head of the fluid level in the reservoir or tank to activate the pilot valve of the control. When the force of the spring setting (or the desired high level shutoff point) is overcome by the force of the reservoir head, the pilot valve shifts positions automatically and closes the main valve. When the reservoir head is eight to ten inches less than the spring setting, the pilot valve shifts to open the main valve.

Remote Sensing Connection

Model CDS6B Altitude Pilot Control is normally supplied mounted on a Cla-Val 210 Series valve and should be installed in a horizontal run of pipe with the main valve cover UP. If Model CDS6B is remotely mounted from the main valve, it is recommended to be installed with adjustment springs UP for ease of adjustment and servicing. Consult factory for recommendations.

After the Cla-Val 210 Series valve is installed in the line, it is necessary to install a sensing line from Model CDS6B control to the reservoir. The sensing line should be 3/4” or larger copper tubing or Schedule 40 PVC pipe. Galvanized pipe is not recommended. The line should slope upward from Model CDS6B toward the reservoir to self purge air out of the line. The slope of the sensing line should not have high points that would entrap air. The line connection point on the reservoir should be a minimum 12” to 18” above the center line of the control.

Note: The sensing line should not be installed into the flowing line between the valve and reservoir, or to a turbulent area, which may not reflect the true reservoir head.

Note: We recommend protecting tubing and valve from freezing temperatures.

**** Consult Factory**

Pilot System Specifications

Temperature Range
Water to 180˚F Max

***Body & Cover**
Cast Stainless ASTM A743

Trim
Stainless Steel

Seals & Diaphragm
Nitrile

Pressure Rating
200 psi Max.**

***Optional Materials**
Stainless Steel 303/304
Stainless Steel 316

Adjustment Ranges
5 - 40 ft.
30 - 80 ft.
70 - 120 ft.
110 - 160 ft.
150 - 200 ft.

© Copyright CLA-VAL - Specifications subject to change without notice.

Cla-Val Product ID

HOW TO ORDER

PROPER IDENTIFICATION

For ordering repair kits, replacement parts, or for inquiries concerning valve operation, it is important to properly identify Cla-Val products already in service by including all nameplate data with your inquiry. Pertinent product data includes valve function, size, material, pressure rating, end details, type of pilot controls used and control adjustment ranges.

IDENTIFICATION PLATES

For product identification, cast-in body markings are supplemented by identification plates as illustrated on this page. The plates, depending on type and size of product, are mounted in the most practical position. **It is extremely important that these identification plates are not painted over, removed, or in any other way rendered illegible.**

This brass plate appears on altitude valves only and is found on top of the outlet flange.

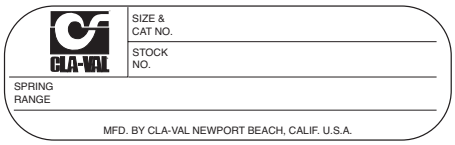

This tag is affixed to the cover of the pilot control valve. The adjustment range appears in the spring range section.

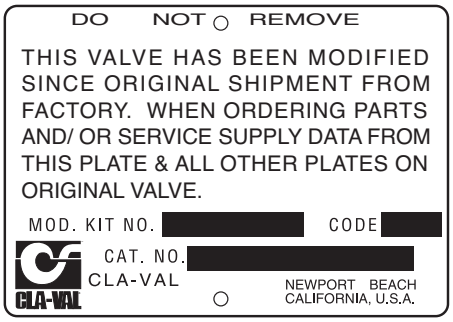

This aluminum plate is included in pilot system modification kits and is to be wired to the new pilot control system after installation.

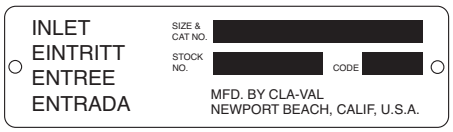

This brass plate appears on valves sized 21/2" and larger and is located on the top of the inlet flange.

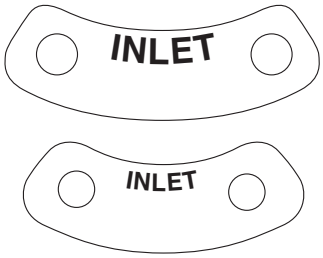

These two brass plates appear on 3/8", 1/2", and 3/4" size valves and are located on the valve cover.

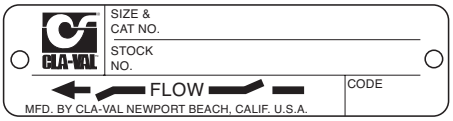

These two brass plates appear on threaded valves 1" through 3" size or flanged valves 1" through 2". It is located on only one side of the valve body.

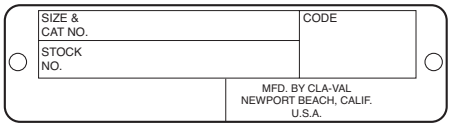

This brass plate is used to identify pilot control valves. The adjustment range is stamped into the plate.

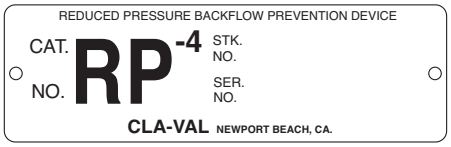

This brass plate is used on our backflow prevention assemblies. It is located on the side of the Number Two check (2" through 10"). The serial number of the assembly is also stamped on the top of the inlet flange of the Number One check.

How to Order

Because of the vast number of possible configurations and combinations available, many valves and controls are not shown in published product and price lists. For ordering information, price and availability on product that are not listed, please contact your local Cla-Val office or our factory office located at:

P. O. Box 1325
Newport Beach, California 92659-0325
(949) 722-4800
FAX (949) 548-5441

© Copyright CLA-VAL - Specifications subject to change without notice.

When Ordering, Please Specify

1. Model Number
2. Globe or Angle Pattern
3. Adjustment range (as application)
4. Valve Size
5. Threaded or Flanged
6. Body and Trim Materials
7. Optional Features
8. Pressure Class

Unless Otherwise Specified

- Globe or angle pattern are the same price
- Ductile iron body and bronze trim are standard
- X46 Flow Clean Strainer or X43 "Y" Strainer are included
- CK2 Isolation Valves are included in price on 4" and larger valve sizes (6" and larger on 600 Series)

Limited Warranty

Automatic valves and controls as manufactured by Cla-Val are warranted for three years from date of shipment against manufacturing defects in material and workmanship that develop in the service for which they are designed, provided the products are installed and used in accordance with all applicable instructions and limitations issued by Cla-Val. Electronic components manufactured by Cla-Val are warranted for one year from the date of shipment.

We will repair or replace defective material, free of charge, that is returned to our factory, transportation charges prepaid, if upon inspection, the material is found to have been defective at time of original shipment. This warranty is expressly conditioned on the purchaser's providing written notification to Cla-Val immediate upon discovery of the defect.

Components used by Cla-Val but manufactured by others, are warranted only to the extent of that manufacturer's guarantee.

This warranty shall not apply if the product has been altered or repaired by others, Cla-Val shall make no allowance or credit for such repairs or alterations unless authorized in writing by Cla-Val.

Disclaimer of Warranties and Limitations of Liability

The foregoing warranty is exclusive and in lieu of all other warranties and representations, whether expressed, implied, oral or written, including but not limited to any implied warranties or merchantability or fitness for a particular purpose. All such other warranties and representations are hereby canceled.

Cla-Val shall not be liable for any incidental or consequential loss, damage or expense arising directly or indirectly from the use of the product. Cla-Val shall not be liable for any damages or charges for labor or expense in making repairs or adjustments to the product. Cla-Val shall not be liable for any damages or charges sustained in the adaptation or use of its engineering data and services. No representative of Cla-Val may change any of the foregoing or assume any additional liability or responsibility in connection with the product. The liability of Cla-Val is limited to material replacements F.O.B. Newport Beach, California.

Terms of Sale

ACCEPTANCE OF ORDERS
All orders are subject to acceptance by our main office at Newport Beach, California.

CREDIT TERMS
Credit terms are net thirty (30) days from date of invoice.

PURCHASE ORDER FORMS
Orders submitted on customer's own purchase order forms will be accepted only with the express understanding that no statements, clauses, or conditions contained in said order form will be binding on the Seller if they in any way modify the Seller's own terms and conditions of sales.

PRODUCT CHANGES
The right is reserved to make changes in pattern, design or materials when deemed necessary, without prior notice.

PRICES
All prices are F.O.B. Newport Beach, California unless expressly stated otherwise on our acknowledgment of the order. Prices are subject to change without notice. The prices at which any order is accepted are subject to adjustment to the Seller's price in effect at the time of shipment. Prices do not include sales, excise, municipal, state or any other Government taxes. Minimum order charge $100.00.

RESPONSIBILITY
We will not be responsible for delays resulting from strikes, accidents, negligence of carriers, or other causes beyond our control. Also, we will not be liable for any unauthorized product alterations or charges accruing there from.

RISK
All goods are shipped at the risk of the purchaser after they have been delivered by us to the carrier. Claims for error, shortages, etc., must be made upon receipt of goods.

EXPORT SHIPMENTS
Export shipments are subject to an additional charge for export packing.

RETURNED GOODS
1. Customers must obtain written approval from Cla-Val prior to returning any material.
2. Cla-Val reserves the right to refuse the return of any products.
3. Products more than six (6) months old cannot be returned for credit.
4. Specially produced, non-standard models cannot be returned for credit.
5. Rubber goods such as diaphragms, discs, o-rings, etc., cannot be returned for credit, unless as part of an unopened vacuum sealed repair kit which is less than six months old.
6. Goods authorized for return are subject to a 35% ($100 minimum) restocking charge and a service charge for inspection, reconditioning, replacement of rubber parts, retesting, repainting and repackaging as required.
7. Authorized returned goods must be packaged and shipped prepaid to Cla-Val, 1701 Placentia Avenue, Costa Mesa, California 92627.

© Copyright CLA-VAL - Specifications subject to change without notice.

Model **Repair Kits**

Model 100-01 Hytrol Main Valve

BUNA-N MATERIAL				
	RUBBER KIT STOCK #	REPAIR KIT STOCK #	REBUILD ASSEMBLY STOCK #	STUD & NUT KIT STOCK #
3/8”	9169801K		21176614B	21176633J
1/2”	9169802H	21176602F	21176615A	21176634H
3/4”	9169802H	21176602F	21176615A	21176634H
1” Non-Guided	9169803F	21176601G	21176616K	21176636F
1”	9169804D	21176603E	21176617J	21176636F
1 1/4”	9169804D	21176603E	21176617J	21176636F
1 1/2”	9169804D	21176603E	21176617J	21176636F
2”	9169805A	21176608K	21176618H	21176637E
2 1/2”	9169811J	21176609J	21176619G	21176638D
3”	9169812G	21176604D	21176620D	21176639C
4”	9169813E	21176605C	21176621C	21176640K
6”	9169815K	21176606B	21176622B	21176641J
8”	9817901D	21176607A	21176623A	21176642H
10”	9817902B	21176610F	21176654C	21176643G
12”	9817903K	21176611E	21176625J	21176644F
14”	9817904H	21176612D	21176626H	21176645E
16”	9817905E	21176613C	21176627G	21176645E

Model 100-20 Hytrol Main Valve

BUNA-N MATERIAL				
	RUBBER KIT STOCK #	REPAIR KIT STOCK #	REBUILD ASSEMBLY STOCK #	STUD & NUT KIT STOCK #
3”	9169805A	21176608K	21176618H	21176637E
4”	9169812G	21176604D	21176620D	21176639C
6”	9169813E	21176605C	21176621C	21176640K
8”	9169815K	21176606B	21176622B	21176641J
10”	9817901D	21176607A	21176623A	21176642H
12”	9817902B	21176610F	21176624K	21176643G
14”	9817903K	21176611E	21176625J	21176644F
16”	9817903K	21176611E	21176625J	21176644F

Model 100-30 Hytrol Main Valve

BUNA-N MATERIAL		
	RUBBER KIT STOCK #	REBUILD ASSEMBLY STOCK #
2 1/2”	21112704H	21235401C
3”	21112702K	21235402B
4”	21112703J	21235403A
6”	27496886J	21235404K
8”	21112701A	21235405J
10”	CF	21235406H

Rubber Kit Includes: Diaphragm, Disc, Spacer Washers. **Model 100-30 also includes:** Stem O-Ring, Seal, Bearing O-Ring.

Repair Kit Includes: Diaphragm, Disc, Spacer Washers, Epoxy Coated Disc Retainer, Epoxy Coated Diaphragm Washer, Protective Washer

Rebuild Assembly Includes: Diaphragm, Disc, Spacer Washers, Epoxy Coated Disc Retainer, Epoxy Coated Diaphragm Washer, Protective Washer, Stainless Steel Bolts & Washers (6" & Below), Stainless Steel Studs, Nuts, & Washers (8" & Above), Stem, Stem Nut, Disc Guide, Standard Cover Spring, Cover Washer. **Model 100-30 also includes:** Upper and Lower Stem and Stem Nut, Stem O-Ring, Seal, Lower Spring, PU Bearing, Bearing O-Ring, Bearing Retainer Ring.

Stud & Nut Kit Includes: Stainless Steel Bolts & Washers (6" & Below), Stainless Steel Studs, Nuts, & Washers (8" & Above)

Consult factory for larger sizes

© Copyright CLA-VAL - Specifications subject to change without notice.

Repair Kits for 100-02/100-21 Powertrol and 100-03/100-22 Powercheck Main Valves
For: Powertrol and Powercheck Main Valves—**150 Pressure Class Only**
Includes: Diaphragm, Disc (or Disc Assembly) and O-rings and full set of spare Spacer Washers.

Valve Size	Kit Stock Number	Valve Size	Kit Stock Number	
	100-02		100-02 & 100-03	100-21 & 100-22
3/8"	9169901H	2 1/2"	9169910J	N/A
1/2" & 3/4"	9169902F	3"	9169911G	9169905J
1"	9169903D	4"	9169912E	9169911G
1 1/4" & 1 1/2"	9169904B	6"	9169913C	9169912E
2"	9169905J	8"	9169950E	9169913C
		10"	9169939H	9169950E
		12"	9169937B	9169939H
				Consult factory for larger sizes

Repair Kits for 100-04/100-23 Hy-Check Main Valves
For: Hy-Check Main Valves—**150 Pressure Class Only**
Includes: Diaphragm, Disc and O-Rings and full set of spare Spacer Washers.

Valve Size	Kit Stock Number		Valve Size	Kit Stock Number	
	100-04	100-23		100-04	100-23
4"	20210901B	N/A	12"	20210905H	20210904J
6"	20210902A	20210901B	14"	20210906G	N/A
8"	20210903K	20210902A	16"	20210907F	20210905H
10"	20210904J	20210903K	20"	N/A	20210907F
			24"	N/A	20210907F
					Consult factory for larger sizes

Repair Kits for Pilot Control Valves (In Standard Materials Only)
Includes: Diaphragm, Disc (or Disc Assembly), O-Rings, Gaskets or spare Screws as appropriate.

BUNA-N® (Standard Material)				**VITON** (For KB Controls)	
Pilot Control	**Kit Stock Number**	**Pilot Control**	**Kit Stock Number**	**Pilot Control**	**Kit Stock Number**
CDB	9170006C	CFM-7A	1263901K	CDB-KB	9170012A
CDB-30	9170023H	CFM-9	12223E	CRA-KB	N/A
CDB-31	9170024F	CRA (w/bucking spring)	9170001D	CRD-KB (w/bucking spring)	9170008J
CDB-7	9170017K	CRD (w/bucking spring)	9170002B	CRL-KB	9170013J
CDH-2	18225D	CRD (no bucking spring)	9170003K	CDHS-2BKB	9170010E
CDHS-2	44607A	CRD-18	20275401K	CDHS-2FKB	9170011C
CDHS-2B	9170004H	CRD-22	98923G	CDHS-18KB (no bucking spring)	9170009G
CDHS-2F	9170005E	CRL (55F, 55L)	9170007A	102C-KB	1726202D
CDHS-3C-A2	24657K	CRL60/55L-60	9170033G		
CDHS-8A	2666901A	CRL60/55L60 1"	9170042H		
CDHS-18	9170003K	CRL-4A	43413E		
CDS-4	9170014G	CRL-5 (55B)	65755B		
CDS-5	14200A	CRL-5A (55G)	20666E		
CDS-6	20119301A	CRL-18	20309801C		
CDS-6A	20349401C	Universal CRL	9170041K		
CDS-7	20349402B	CV	9170019F		
CDS-7DO	20349403A	X105L (O-ring)	00951E	Buna-N®	
CFCM-M1	1222301C	102B-1	1502201F		
CFM-2	12223E	102C-2	1726201F	CRD Disc Ret. (Solid)	C5256H
CFM-7	1263901K	102C-3	1726201F	CRD Disc Ret. (Spring)	C5255K

Repair Assemblies (In Standard Materials Only)

Control	Description	Stock Number
CF1-C1	Pilot Assembly Only	89541H
CF1-CI	Complete Float Control less Ball and Rod	89016A
CFC2-C1	Disc, Distributor and Seals	2674701E
CSM 11-A2-2	Mechanical Parts Assembly	97544B
CSM 11-A2-2	Pilot Assembly Only	18053K
33A 1"	Complete Internal Assembly and Seal	2036030B
33A 2"	Complete Internal Assembly and Seal	2040830J

When ordering, please give complete nameplate data of the valve and/or control being repaired. MINIMUM ORDER CHARGE APPLIES

© Copyright CLA-VAL - Specifications subject to change without notice.