Model 347GF
REFUELING NOZZLE

ENGINEERING DATA SHEET

347GF Nozzle with
HEPCV and Dry Break

347GF Nozzle with HEPCV
& Strainer Ball Valve

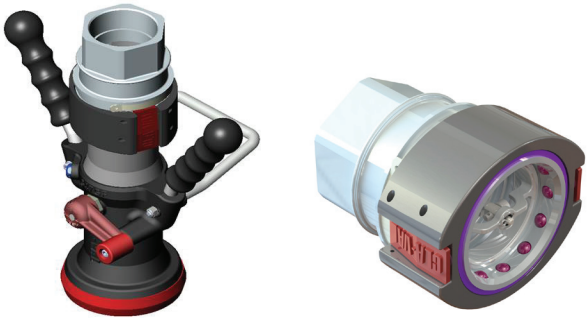

347GF Nozzle with
Dry Break

347GF Nozzle
Connection View

- Designed in accordance with SAE AS5877
- Connects to MS24484 Single Point Adapter
- Six Slot Connection Head
- Light weight and compact size
- All aluminum and stainless steel construction
- Low pressure drop
- Integrated durable Swivel Joint
- Poppet does not require adjustment
- Two threaded ports in Nozzle Body

The Cla-Val 347GF Nozzle is designed to maximize safe refueling operations. The internal interlock system, fully contained within the nozzle body, results in a smaller, thinner, lighter nozzle that can easily connect to all aircraft, including smaller regional or private jets that have minimal space in or around their refueling ports. The internal interlock prevents the nozzle from opening until a positive connection to an aircraft single point adapter is made. In addition, when connected to an aircraft single point adapter, the 347GF Nozzle cannot be rotated or removed until the operating lever is first rotated to the fully closed position. A spring loaded safety lock prevents the nozzle from being connected to an aircraft adapter in an unsafe or incomplete manner.

The Cla-Val 347GF Nozzle is also designed to simplify refueling operations. This lightweight design reduces the physical stresses involved in connecting the nozzle to the aircraft by featuring a six slot connection head, making it much easier to connect to a three-lug aircraft single point adapter. The connection head features high strength, hardened stainless steel components to assure superior durability to withstand the toughest, most abusive environments. Reduced flow resistance was a focus throughout the design of the nozzle and all related components and accessories so that pressure drop would be minimal, thus reducing refueling times.

© Copyright CLA-VAL - Specifications subject to change without notice.

Pressure Drop Data

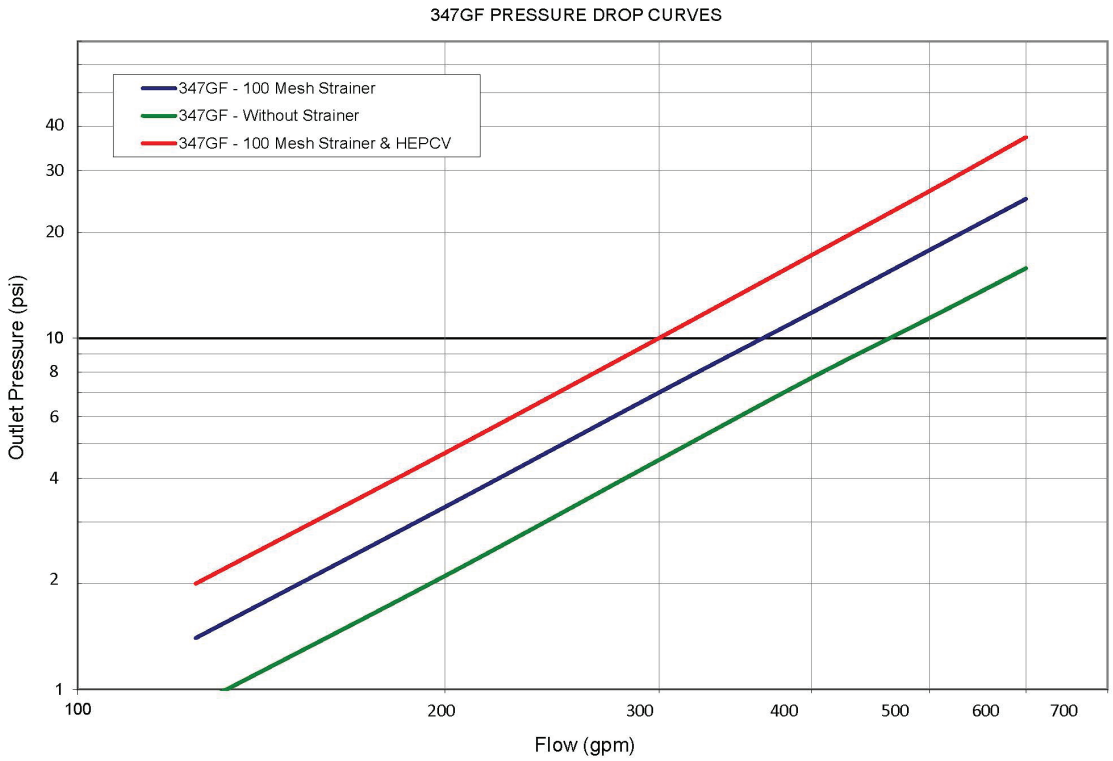

Model 347GF Nozzle

Refueling Nozzle
Model Numbering Scheme

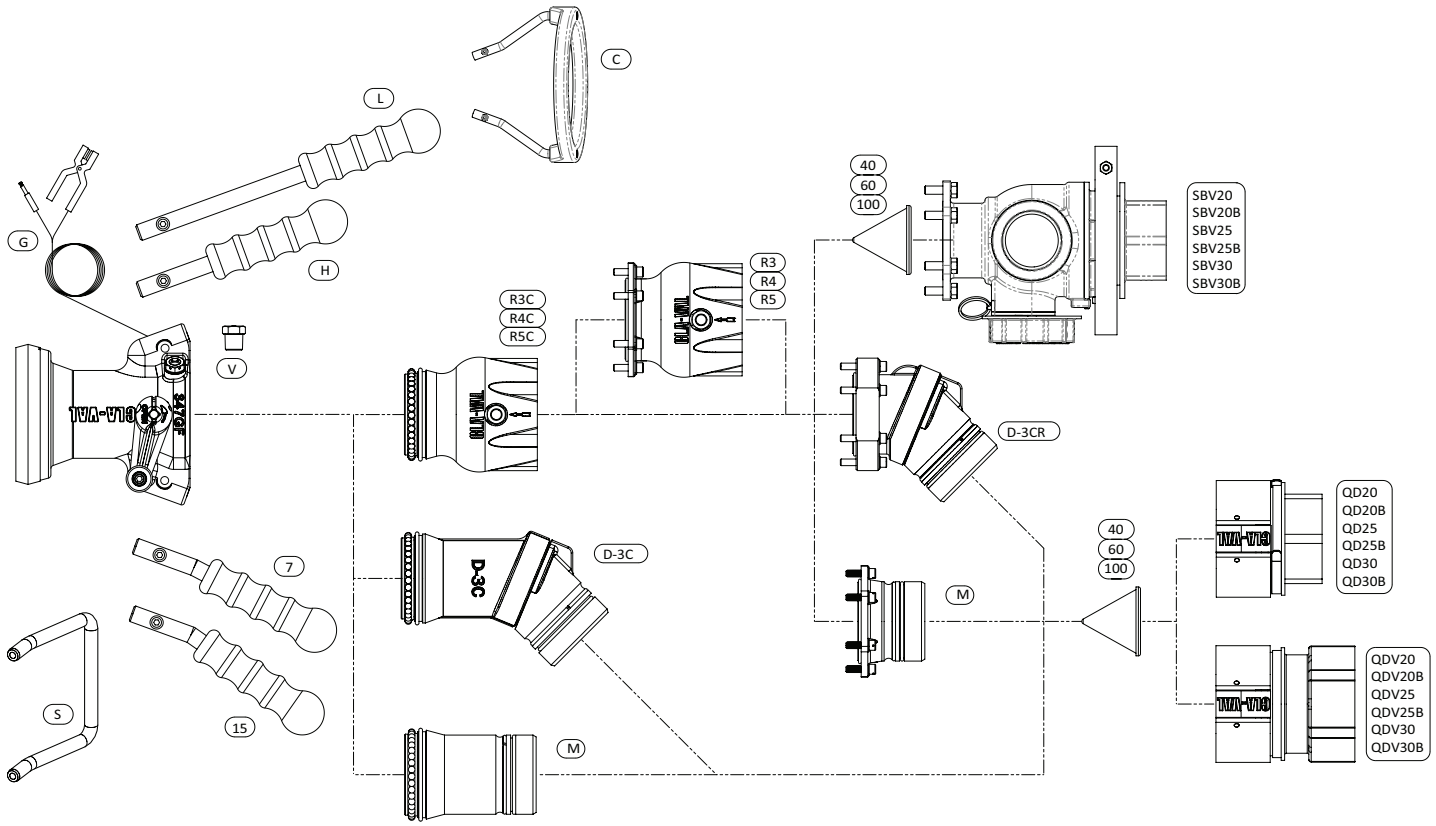

© Copyright CLA-VAL - Specifications subject to change without notice.

Create Complete Model Numbers for Various Applications

It is easy to customize a 347GF Refueling Nozzle to meet special requirements. Complete model numbers always begin with “347GF”. Add your option selections to this base model number, following the flow chart above from left to right. See example below.

347GF-7GSVM100QDV25

- 2.5” Dry Break Quick Disconnect
- 100 Mesh Strainer
- Male Adapter
- Vacuum Breaker
- Stowage Bar
- Grounding Cable
- 7-Degree Handles

347GF-CSR5C100SBVG25B

- 2.5” BSPP Threaded Connection
- Class SBV Inspection Cover
- Strainer Ball Valve
- 100 Mesh Strainer
- 55 PSI Hose End Regulator With Swivel Connection
- Stowage Bar
- Circular Handle

Available Options for Model 347GF

Available Options Added To 347GF	
C	Circular Handle
H	Standard Handles
L	Long Handles
7	Standard Handles with 7° Bend
15	Standard Handles with 15° Bend
G	Grounding Cable
V	Vacuum Break
S	Stowage Bar
R3C	35 PSIG HEPCV with Swivel Connection
R4C	45 PSIG HEPCV with Swivel Connection
R5C	55 PSIG HEPCV with Swivel Connection
R6C	50 PSIG HEPCV with Swivel Connection
R3	35 PSIG HEPCV with Flanged Outlet
R4	45 PSIG HEPCV with Flanged Outlet
R5	55 PSIG HEPCV with Flanged Outlet
R6	50 PSIG HEPCV with Flanged Outlet
D-1C	D-1 Male QD Inlet with Swivel Connection
D-2C	D-2 Male QD Inlet with Swivel Connection

Available Options Added To 347GF	
D-3C	D-3 Male QD Inlet With Swivel Connection
D-3CR	D-3 Male QD Inlet With Flanged Connection
M	Male Quick Disconnect Adapter
40	40 Mesh Strainer
60	60 Mesh Strainer
100	100 Mesh Strainer
QD	QD Standard Quick Disconnect
QDV	Dry Break Quick Disconnect
SBV	349GF Strainer Ball Valve
B	Blank SBV Inspection Cover
G	Glass SBV Inspection Cover
20	2-Inch NPT Threads
20B	2-Inch BSPP Threads
25	2.5-Inch NPT Threads
25B	2.5-Inch BSPP Threads
30	3-Inch NPT Threads
30B	3-Inch BSPP Threads

© Copyright CLA-VAL - Specifications subject to change without notice.

Envelope Dimensions

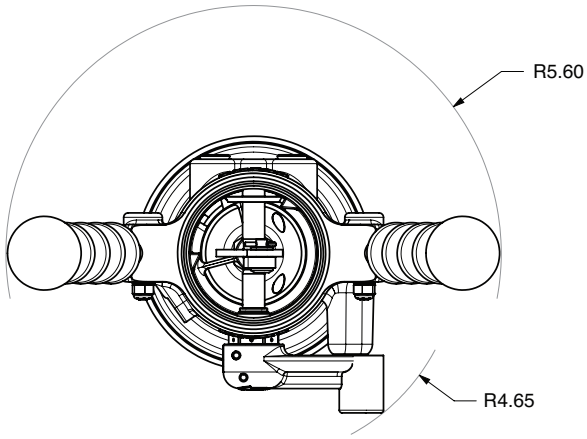

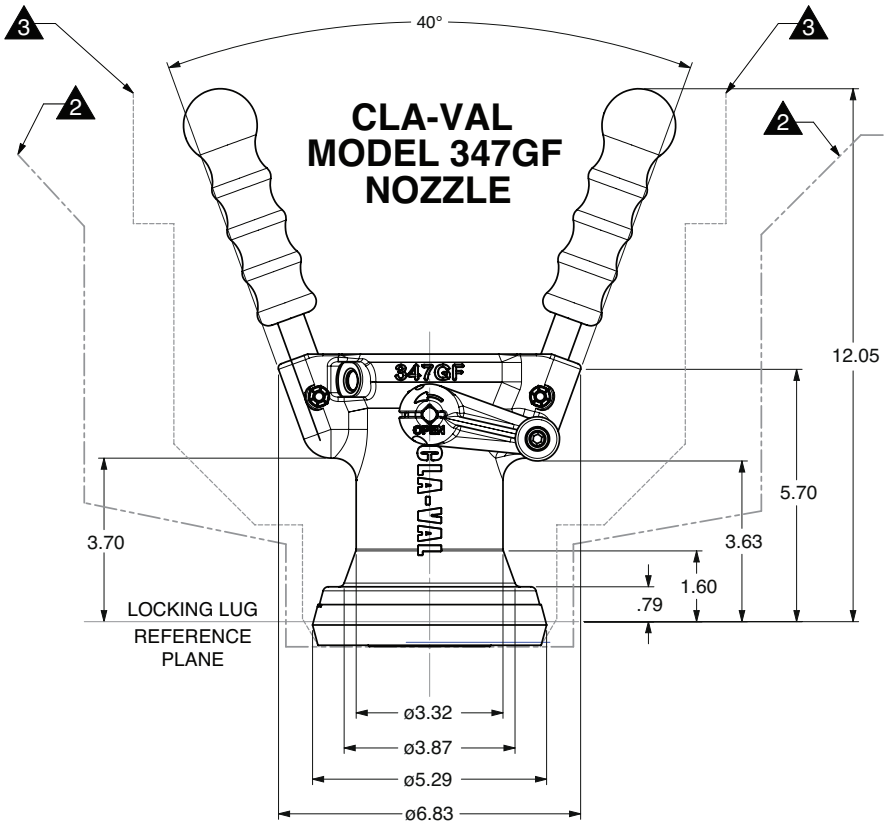

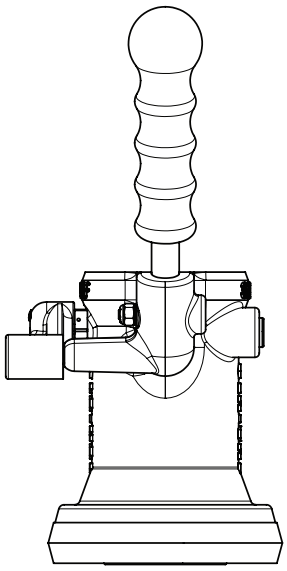

Weight: 6.6875 lbs

© Copyright CLA-VAL - Specifications subject to change without notice.